ASSEMBLY INSTRUCTIONS

B09 B12 B15 B18 B21

	DIAGRAM	CONNECTING FITTINGS	QTY
①		CAM LOCK SYSTEM	10ps
②		CAM LOCK SYSTEM	10ps
③		SHELF SUPPORT	4ps
④		SLIDE RAIL	1ps
⑤		CORNER BRACES	4ps
⑥		CORNER BRACES SCREWS(ϕ4*16mm)	22ps

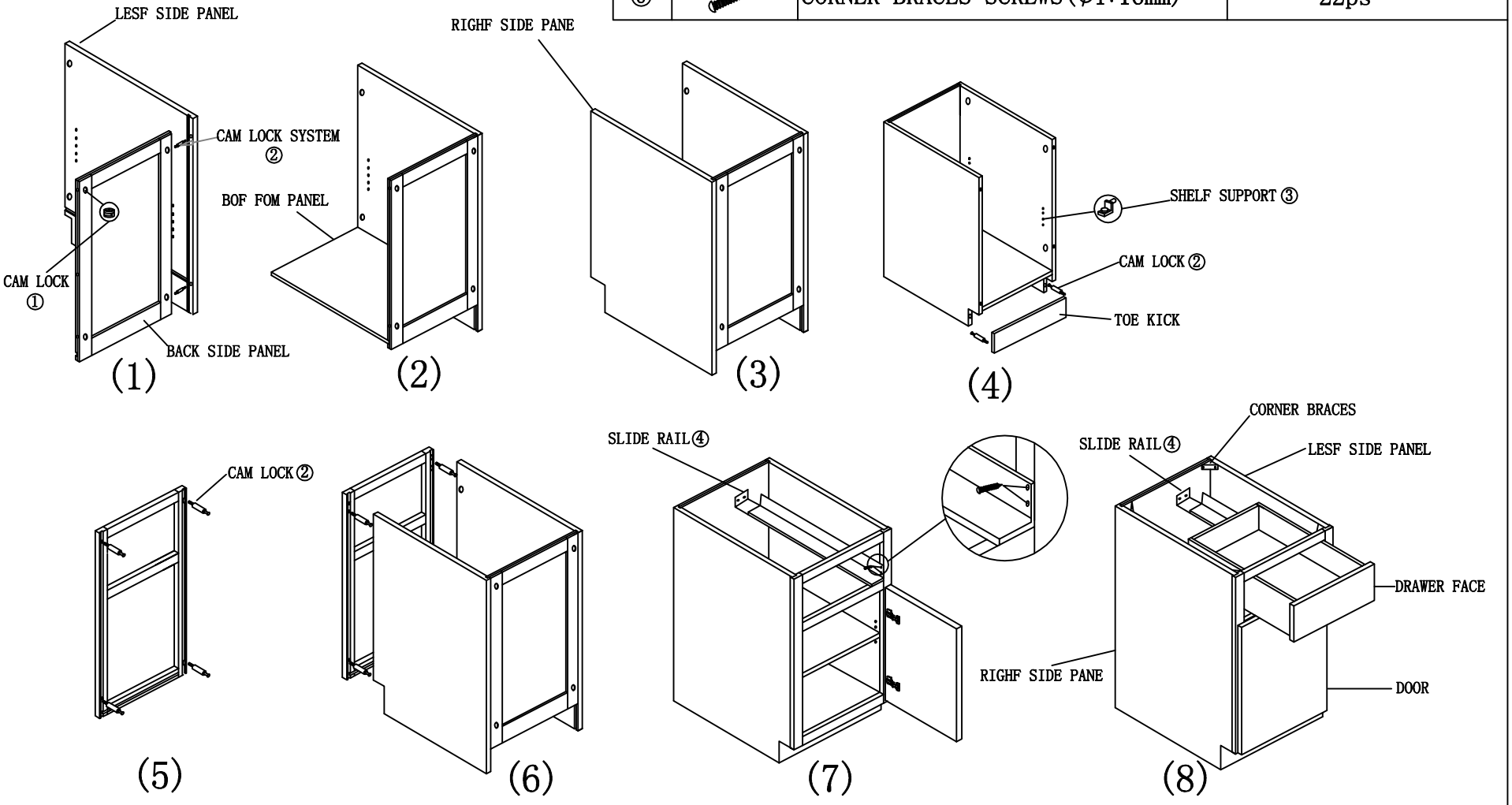

由 Autodesk 教育版产品制作

ASSEMBLY INSTRUCTIONS

B(24)

	DIAGRAM	CONNECTING FITTINGS	QTY
①		CAM LOCK SYSTEM	10ps
②		CAM LOCK SYSTEM	10ps
③		SHELF SUPPORT	4ps
④		SLIDE RAIL	1ps
⑤		CORNER BRACES	4ps
⑥		CORNER BRACES SCREWS(ϕ4*16mm)	28ps

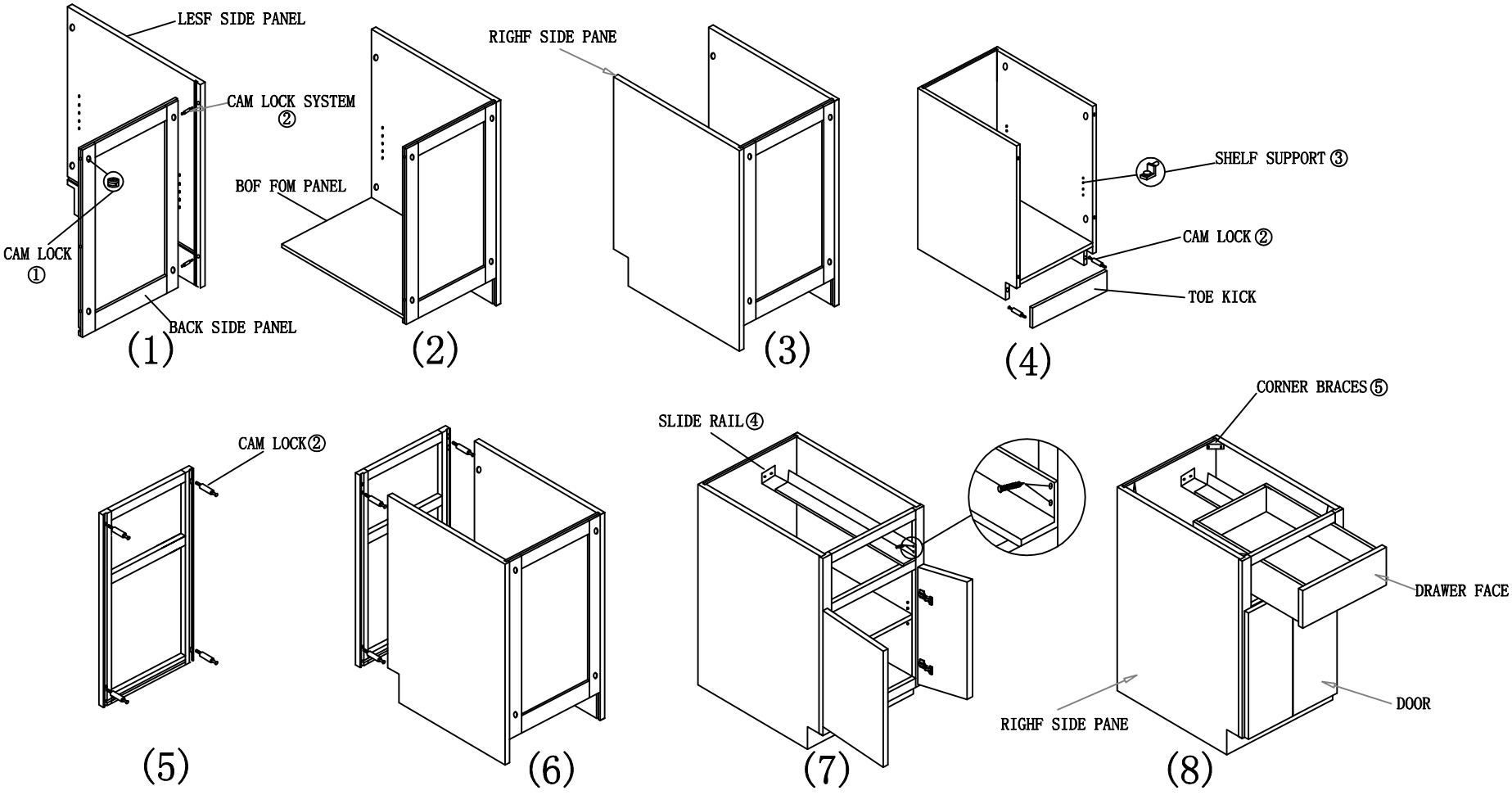

ASSEMBLY INSTRUCTIONS
B27 B30

	DIAGRAM	CONNECTING FITTINGS	QTY
①		CAM LOCK SYSTEM	10ps
②		CAM LOCK SYSTEM	10ps
③		SHELF SUPPORT	4ps
④		SLIDE RAIL	2ps
⑤		CORNER BRACES	4ps
⑥		CORNER BRACES SCREWS(ϕ4*16mm)	36ps

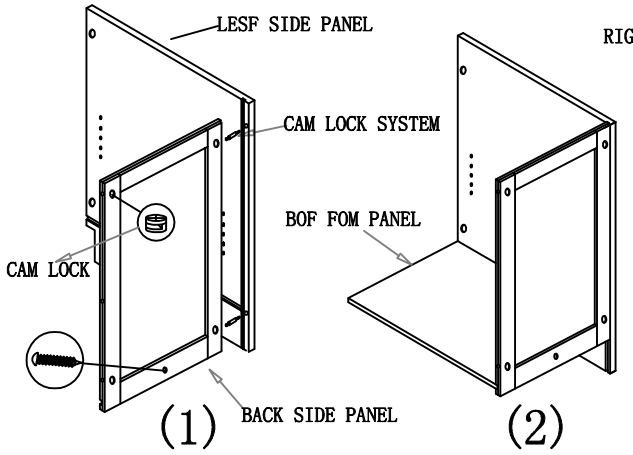

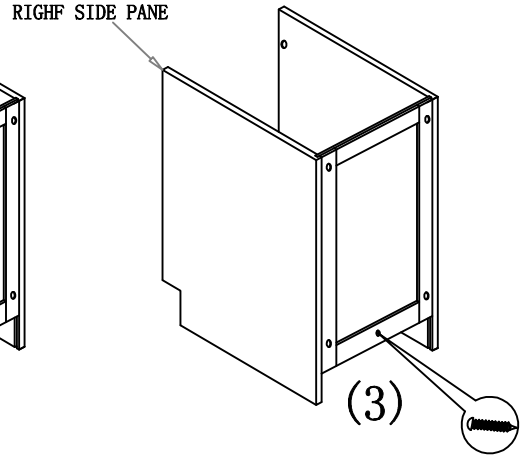

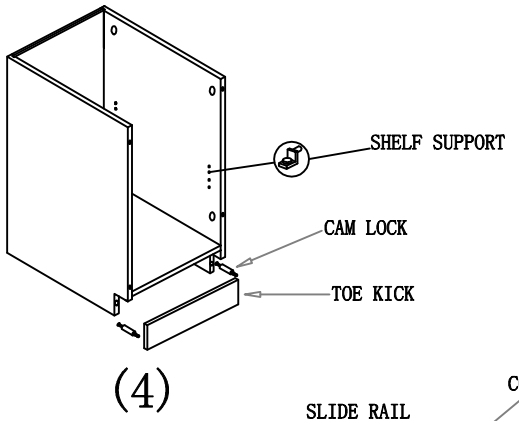

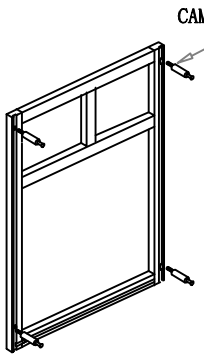

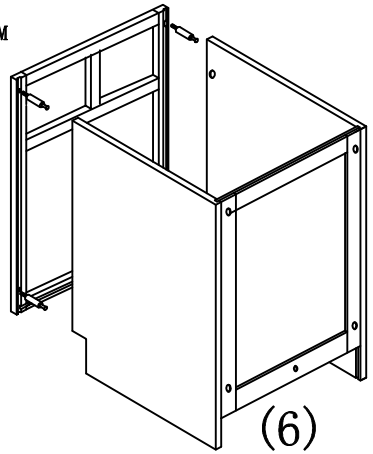

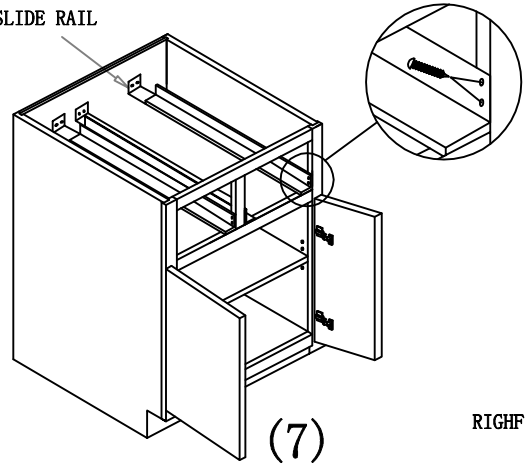

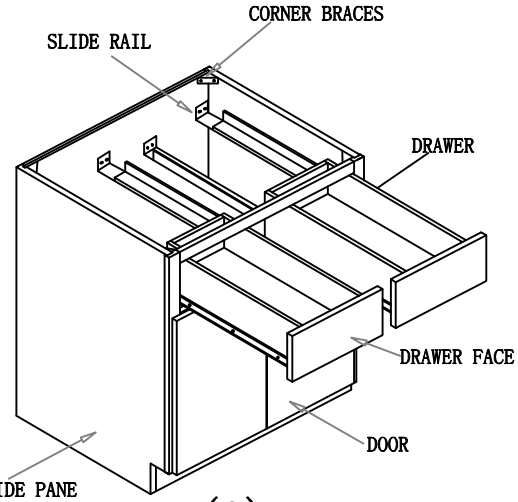

ASSEMBLY INSTRUCTIONS
SB33 SB36 SB42

	DIAGRAM	CONNECTING FITTINGS	QTY
①		CAM LOCK SYSTEM	10ps
②		CAM LOCK SYSTEM	10ps
③		SHELF SUPPORT	4ps
④		SLIDE RAIL	
⑤		CORNER BRACES	4ps
⑥		CORNER BRACES SCREWS(ϕ4*16mm)	20ps

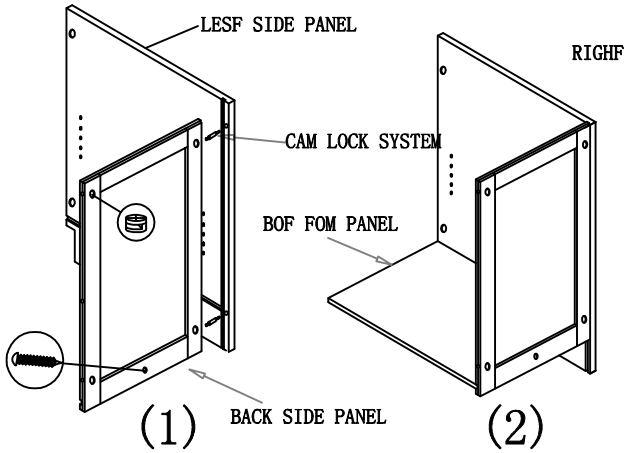

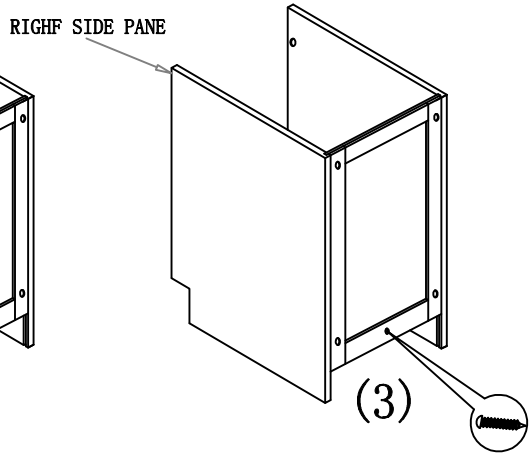

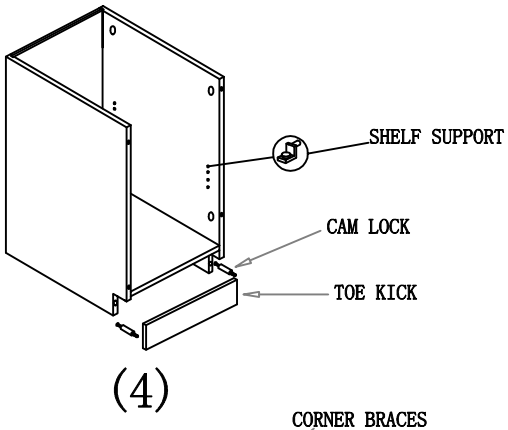

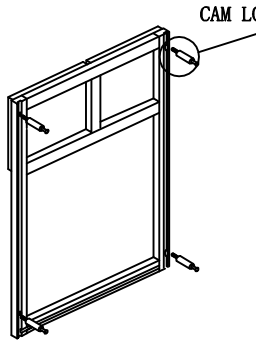

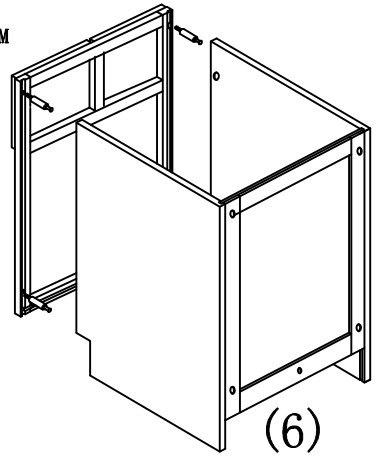

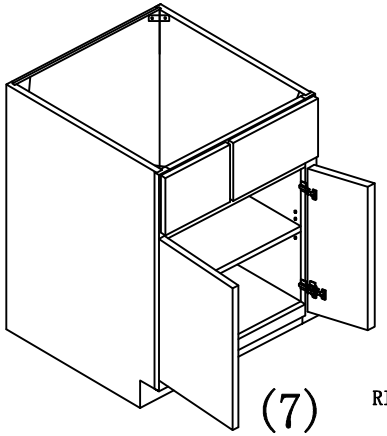

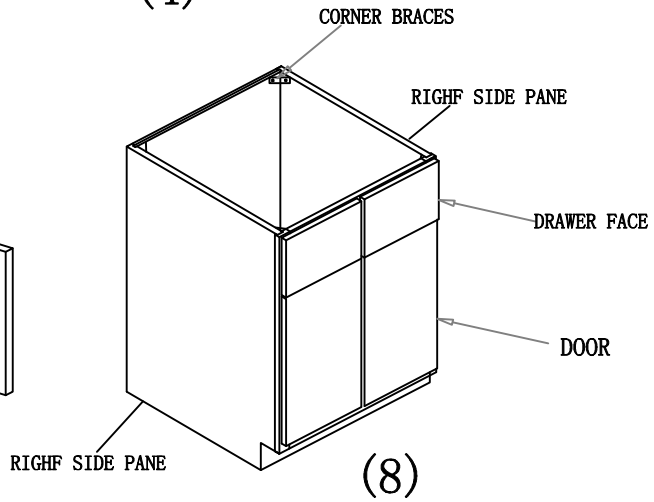

ASSEMBLY INSTRUCTIONS
DB12 DB15 DB18 DB24

	DIAGRAM	CONNECTING FITTINGS	QTY
①		CAM LOCK SYSTEM	10ps
②		CAM LOCK SYSTEM	10ps
③		SHELF SUPPORT	
④		SLIDE RAIL	3ps
⑤		CORNER BRACES	4ps
⑥		CORNER BRACES SCREWS(ϕ4*16mm)	32ps

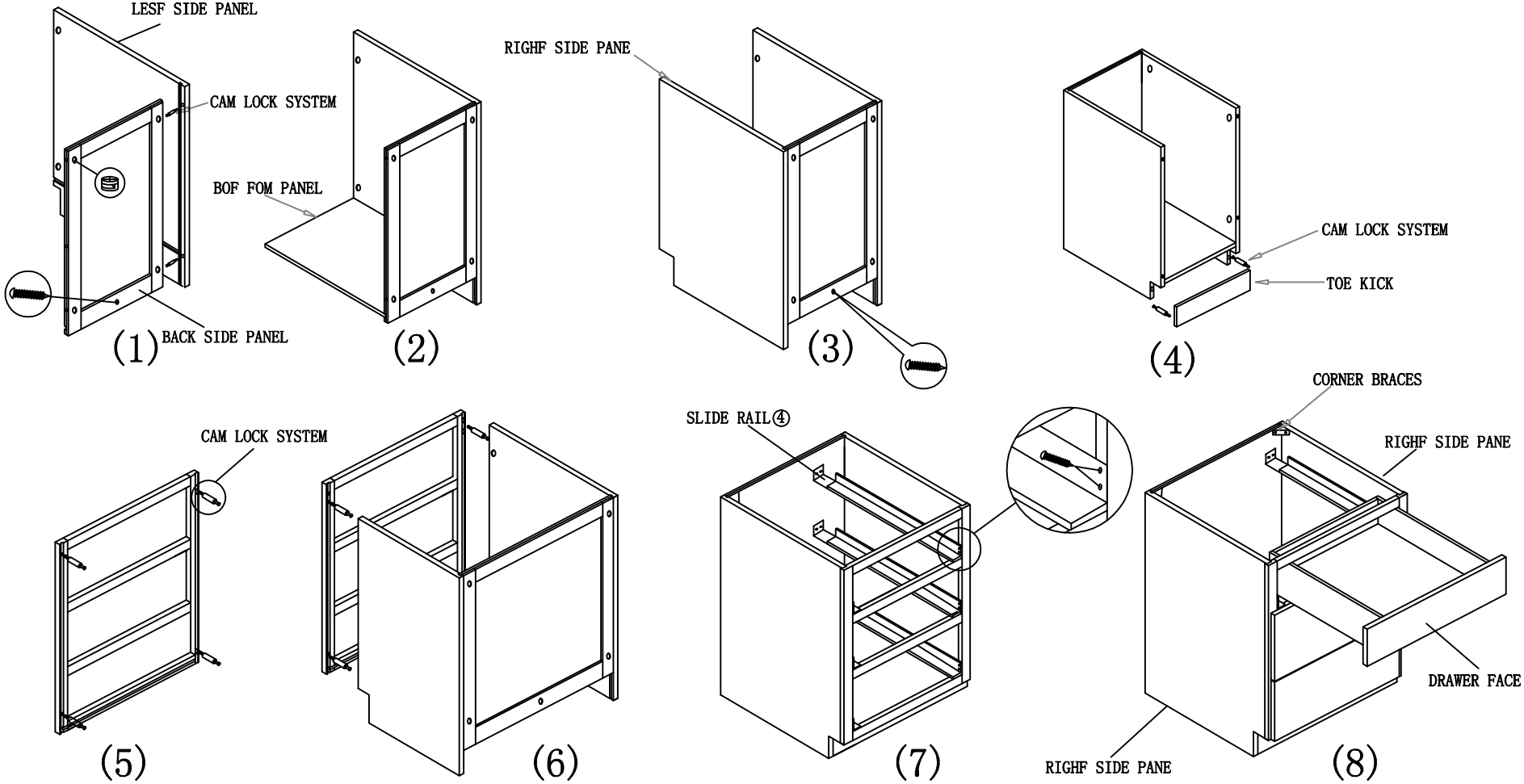

ASSEMBLY INSTRUCTIONS
V24 V27 V30 V36

	DIAGRAM	CONNECTING FITTINGS	QTY
①		CAM LOCK SYSTEM	10ps
②		CAM LOCK SYSTEM	10ps
③		SHELF SUPPORT	4ps
④		SLIDE RAIL	
⑤		CORNER BRACES	4ps
⑥		CORNER BRACES SCREWS(ϕ4*16mm)	20ps

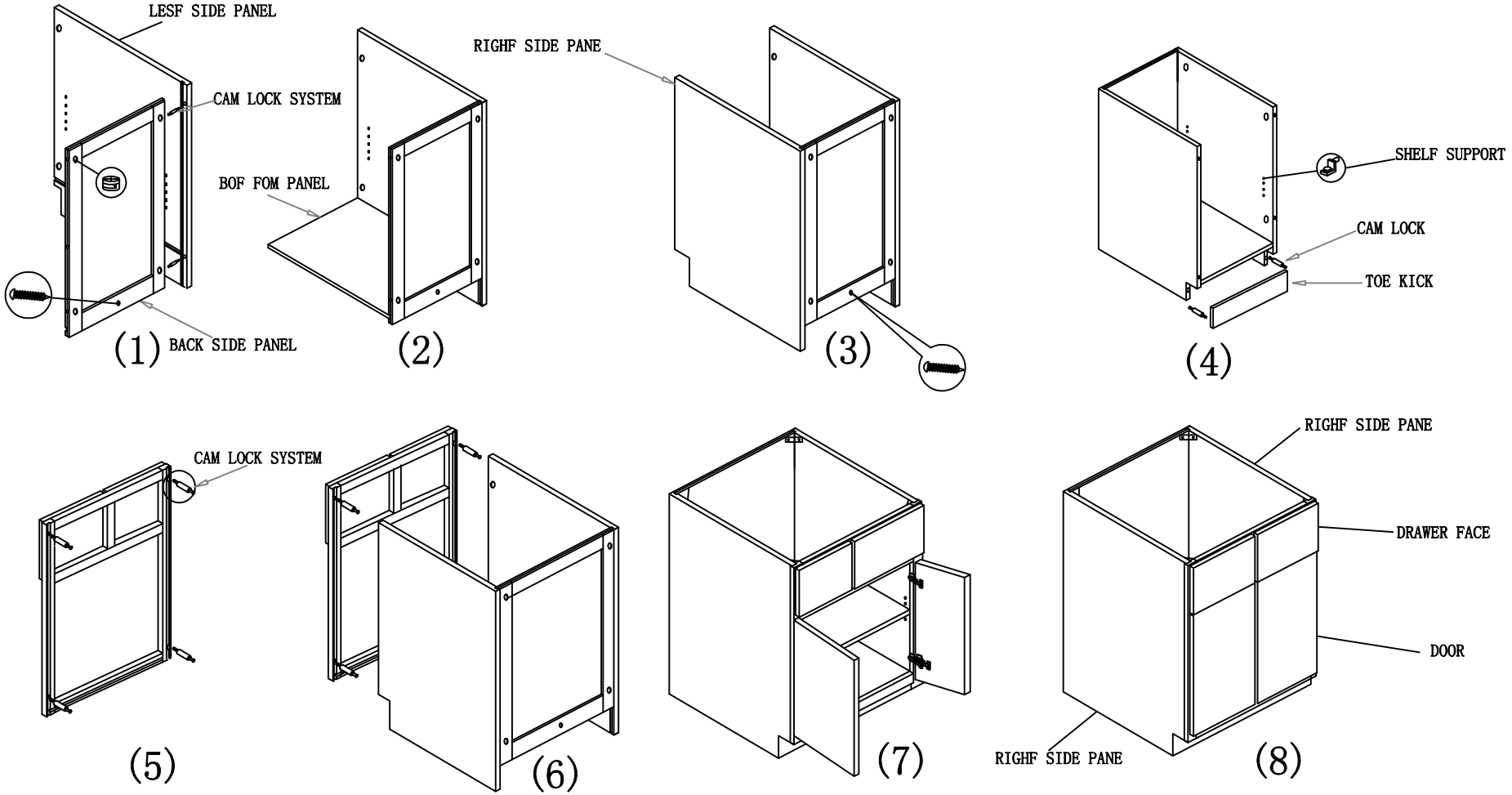

ASSEMBLY INSTRUCTIONS
VDB1 VDB15 VDB18

	DIAGRAM	CONNECTING FITTINGS	QTY
①		CAM LOCK SYSTEM	10ps
②		CAM LOCK SYSTEM	10ps
③		SHELF SUPPORT	
④		SLIDE RAIL	3ps
⑤		CORNER BRACES	4ps
⑥		CORNER BRACES SCREWS(ϕ4*16mm)	26ps

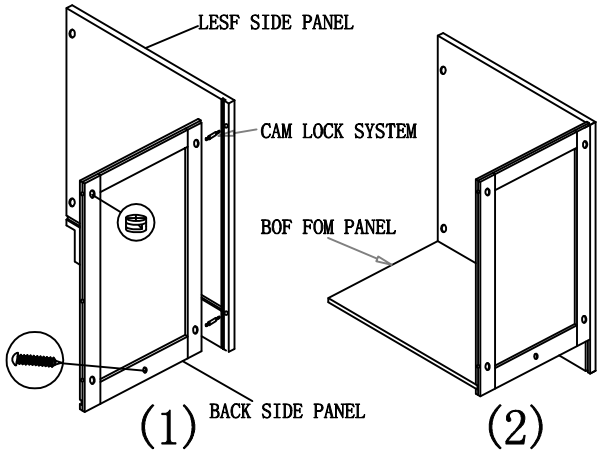

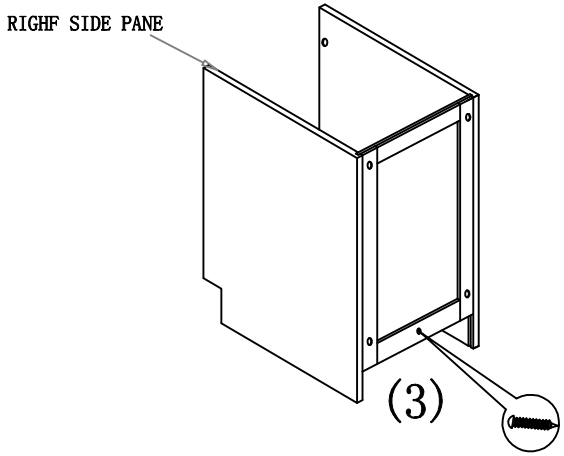

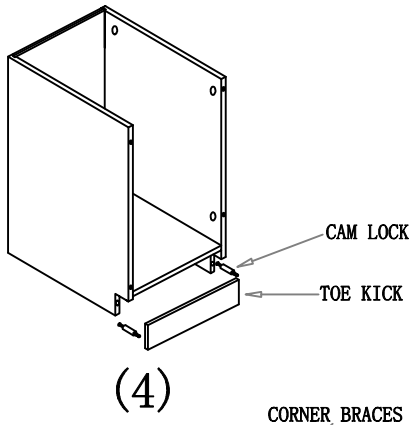

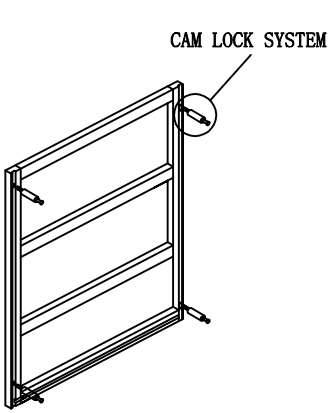

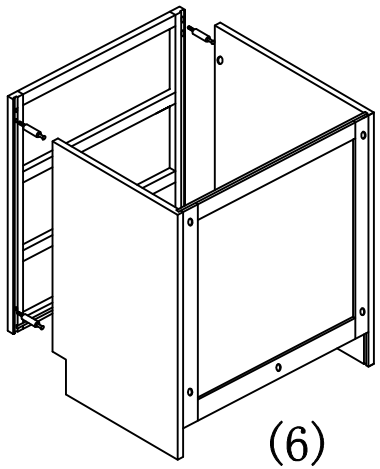

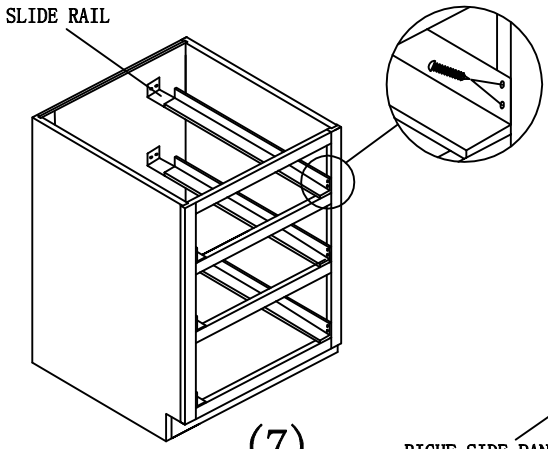

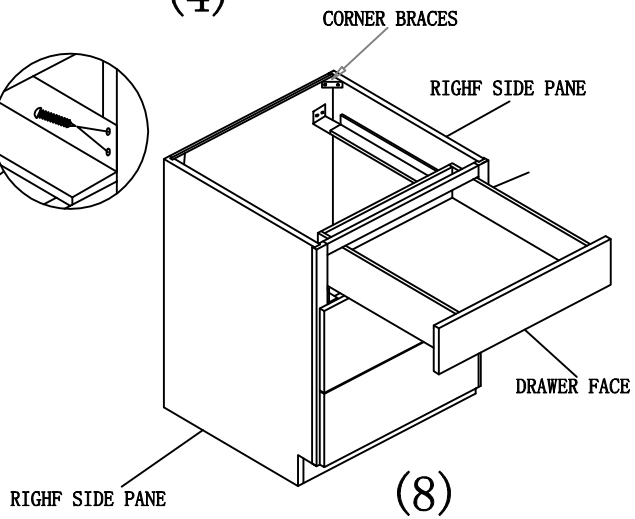

ASSEMBLY INSTRUCTIONS
VSD36 VSD42

	DIAGRAM	CONNECTING FITTINGS	QTY
①		CAM LOCK SYSTEM	11ps
②		CAM LOCK SYSTEM	11ps
③		SHELF SUPPORT	4ps
④		SLIDE RAIL	3ps
⑤		CORNER BRACES	4ps
⑥		CORNER BRACES SCREWS(φ4*16mm)	38ps

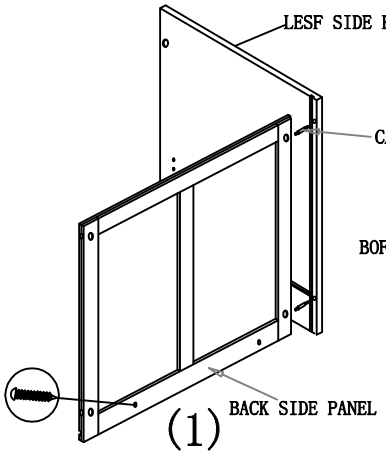

(1)

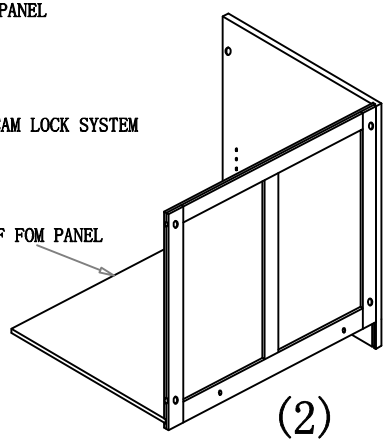

(2)

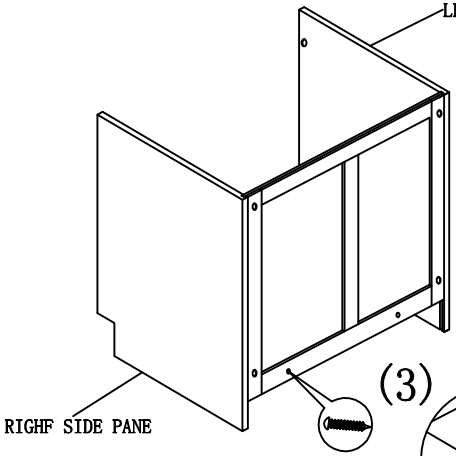

(3)

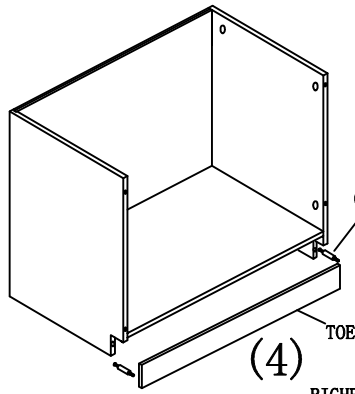

(4)

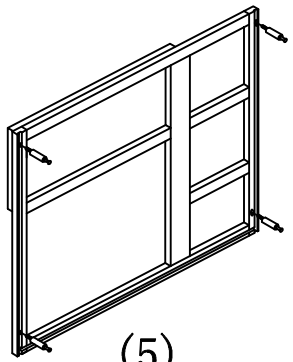
(5)

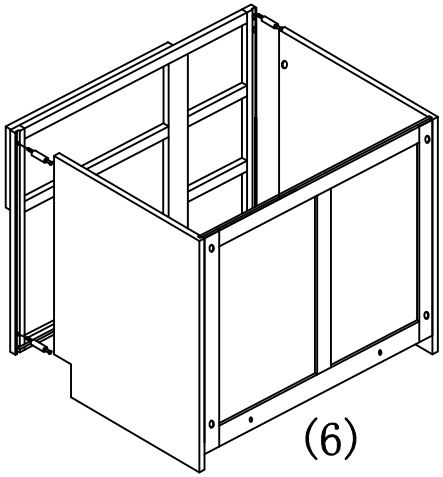
(6)

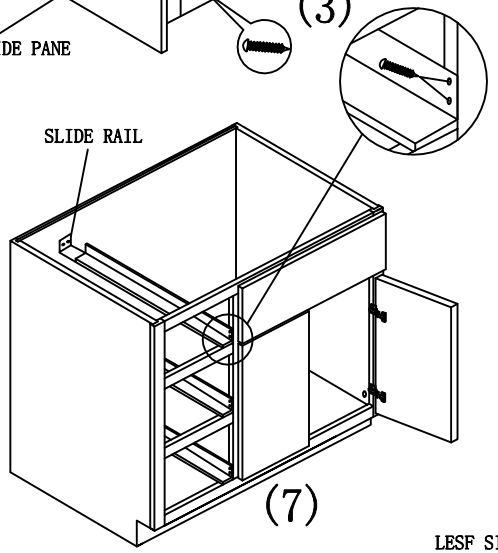

(7)

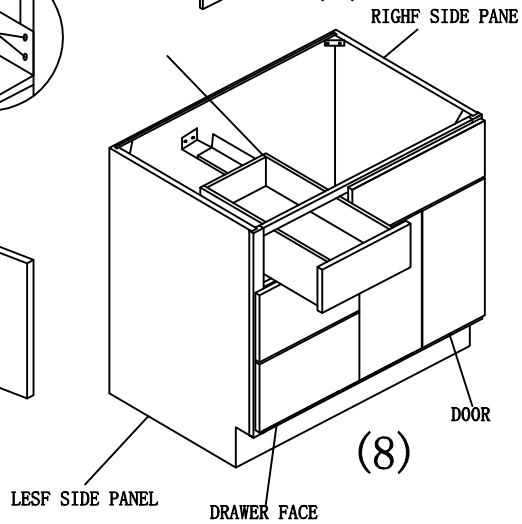

(8)

ASSEMBLY INSTRUCTIONS

BBC30 BBC36 BBC42 BBC48

	DIAGRAM	CONNECTING FITTINGS	QTY
①		CAM LOCK SYSTEM	11ps
②		CAM LOCK SYSTEM	11ps
③		SHELF SUPPORT	4ps
④		SLIDE RAIL	1ps
⑤		CORNER BRACES	4ps
⑥		CORNER BRACES SCREWS(φ4*16mm)	20ps

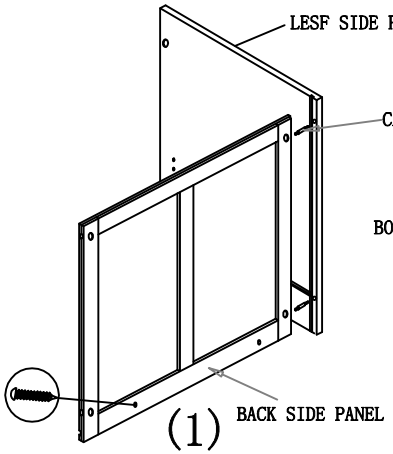

(1)

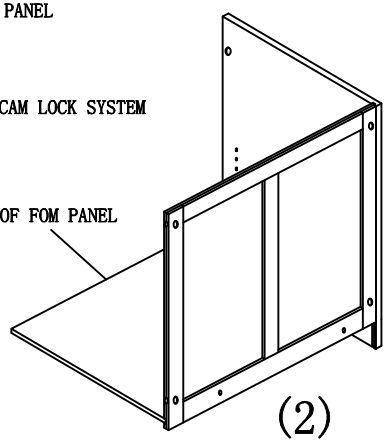

(2)

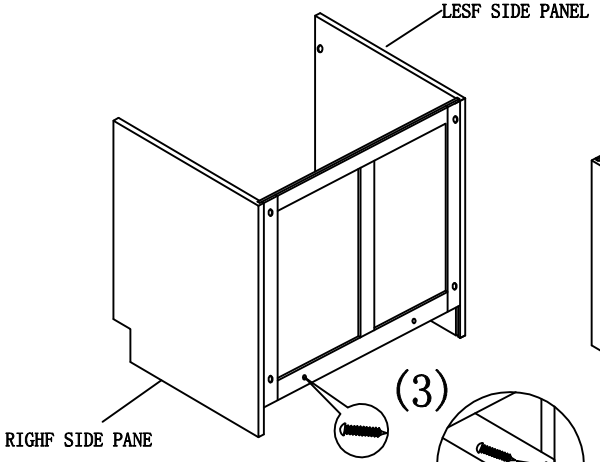

(3)

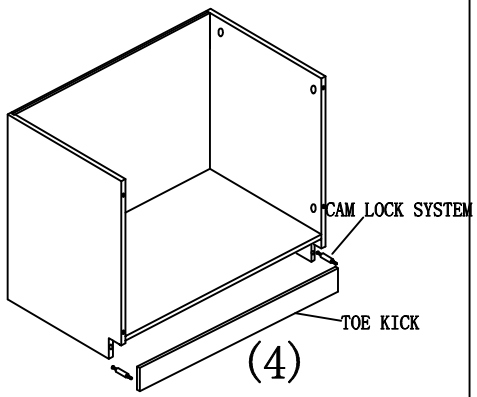

(4)

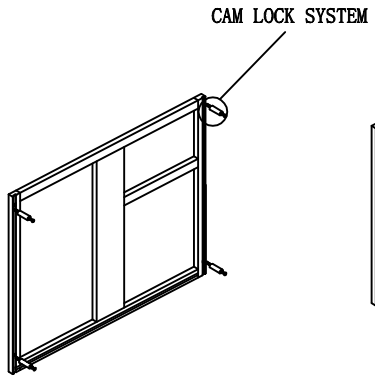

(5)

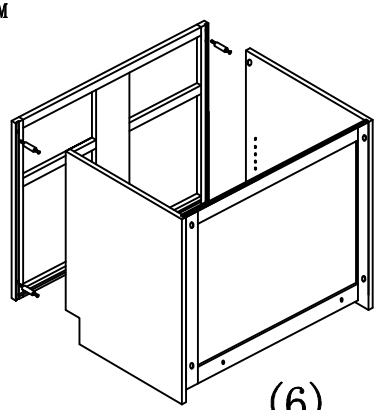

(6)

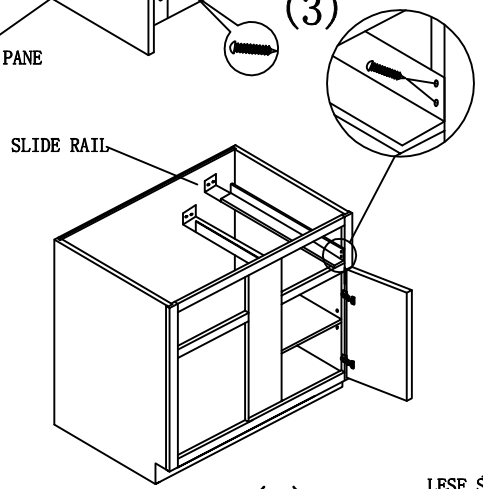

(7)

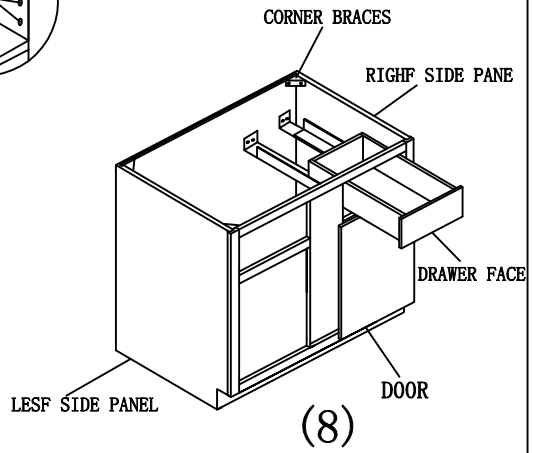

(8)

ASSEMBLY INSTRUCTIONS
DB06-4P

	DIAGRAM	CONNECTING FITTINGS	QTY
①		CAM LOCK SYSTEM	10ps
②		CAM LOCK SYSTEM	10ps
③		SHELF SUPPORT	
④		SLIDE RAIL	4ps
⑤		CORNER BRACES	4ps
⑥		CORNER BRACES SCREWS(ϕ4*16mm)	32ps

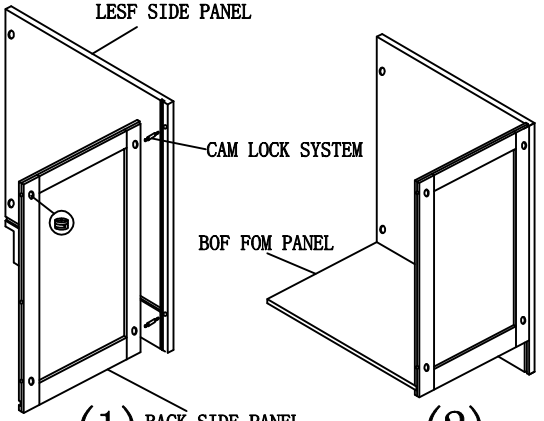

(1) (2)

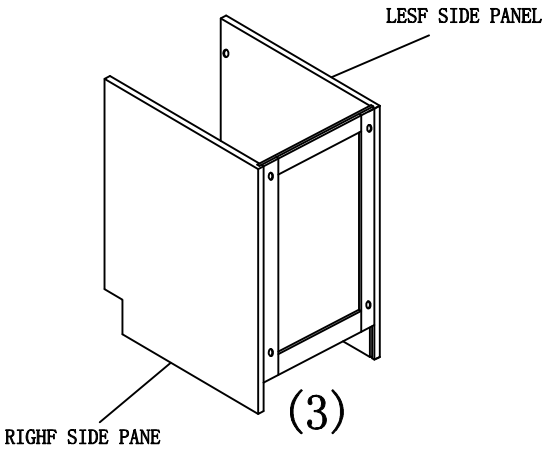

(3)

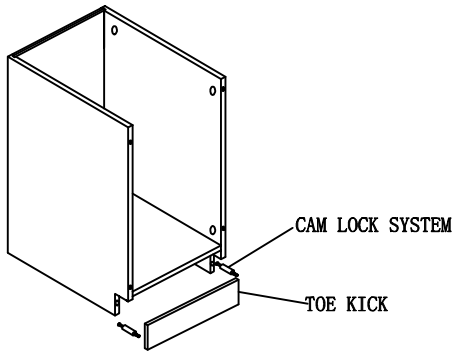

(4)

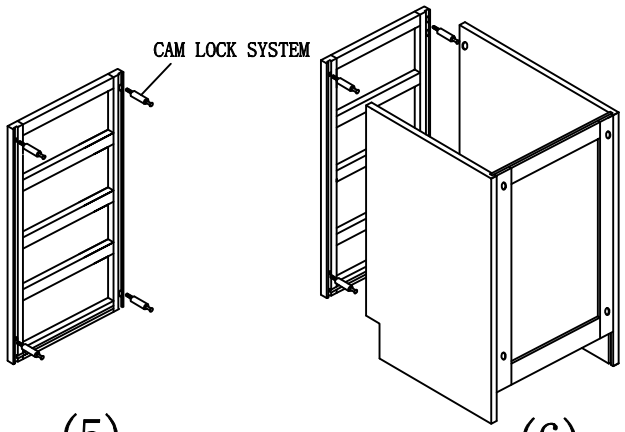

(5) (6)

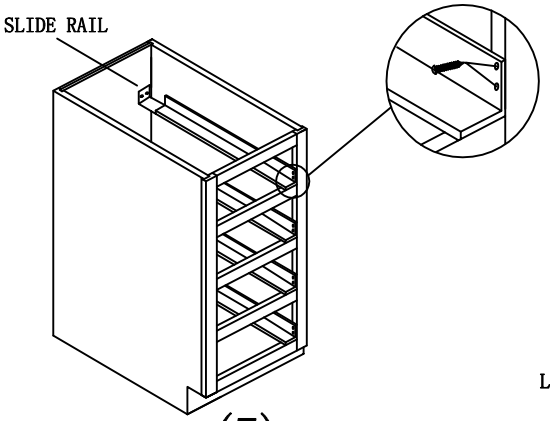

(7)

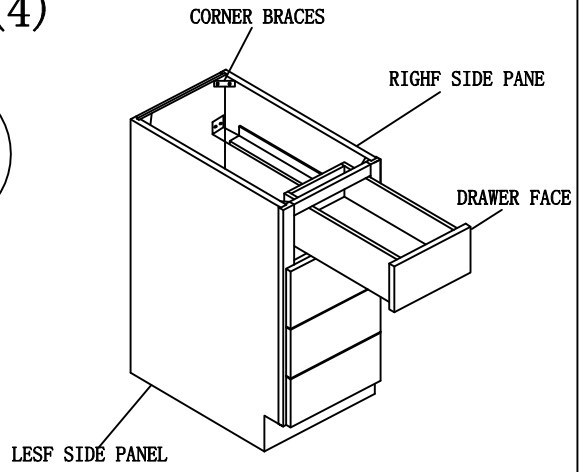

(8)

ASSEMBLY INSTRUCTIONS

FSB33 FSB36 FSB42

	DIAGRAM	CONNECTING FITTINGS	QTY
①		CAM LOCK SYSTEM	10ps
②		CAM LOCK SYSTEM	10ps
③		SHELF SUPPORT	10ps
④		SLIDE RAIL	
⑤		CORNER BRACES	4ps
⑥		CORNER BRACES SCREWS(ϕ4*16mm)	20ps

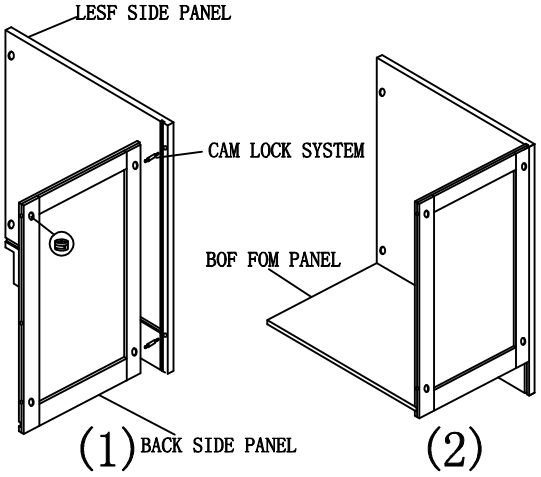

(1)

(2)

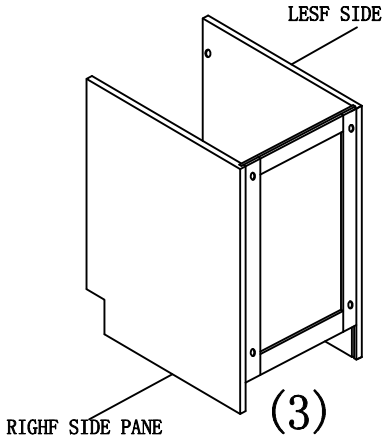

(3)

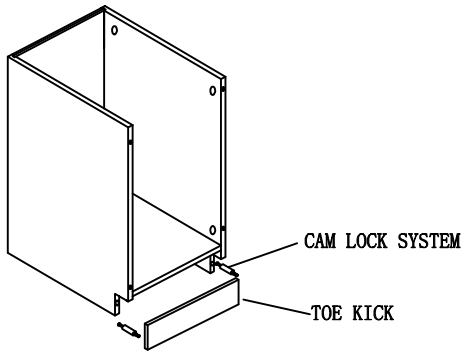

(4)

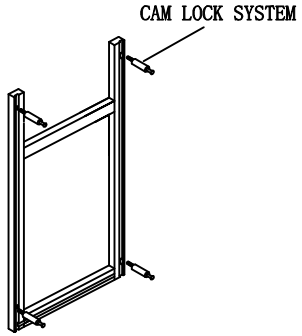

(5)

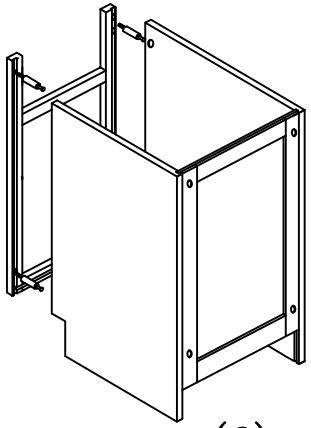
(6)

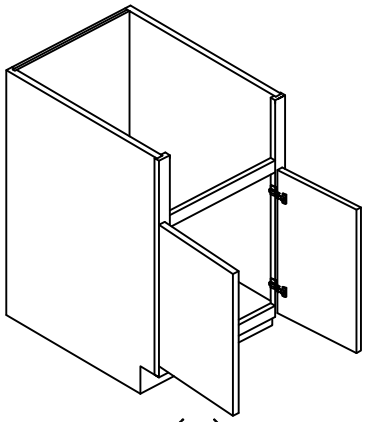
(7)

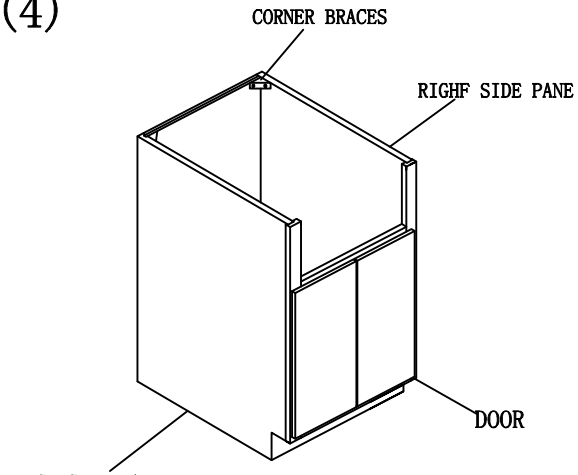

(8)

ASSEMBLY INSTRUCTIONS

DB06 DB7.5 DB09 SR12

	DIAGRAM	CONNECTING FITTINGS	QTY
①		CAM LOCK SYSTEM	10ps
②		CAM LOCK SYSTEM	10ps
③		SHELF SUPPORT	
④		SLIDE RAIL	2ps
⑤		CORNER BRACES	4ps
⑥		CORNER BRACES SCREWS(ϕ4*16mm)	14ps

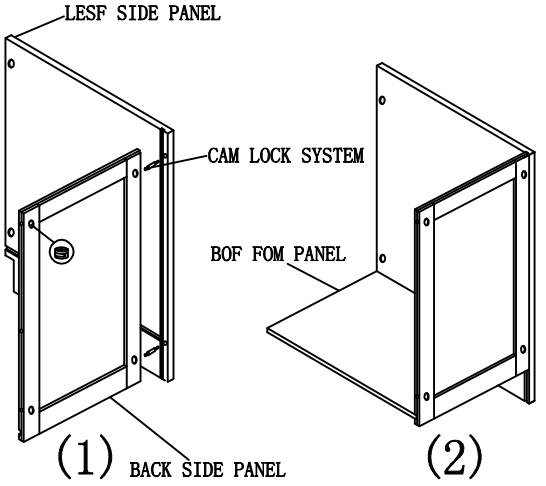

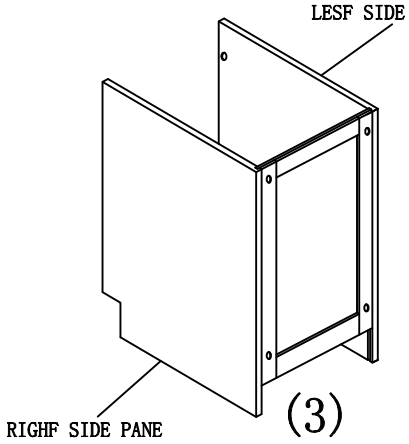

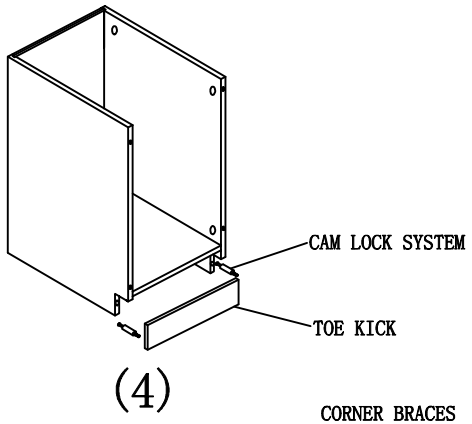

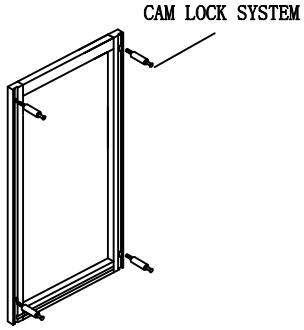

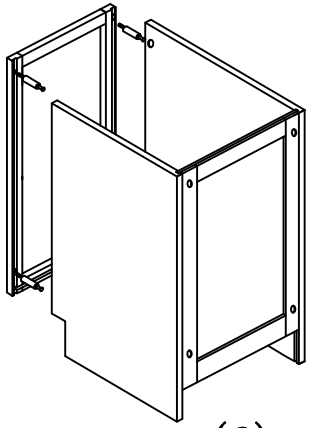

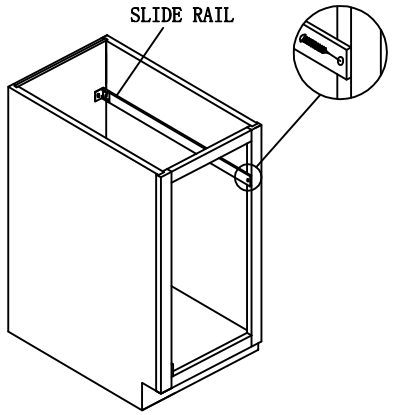

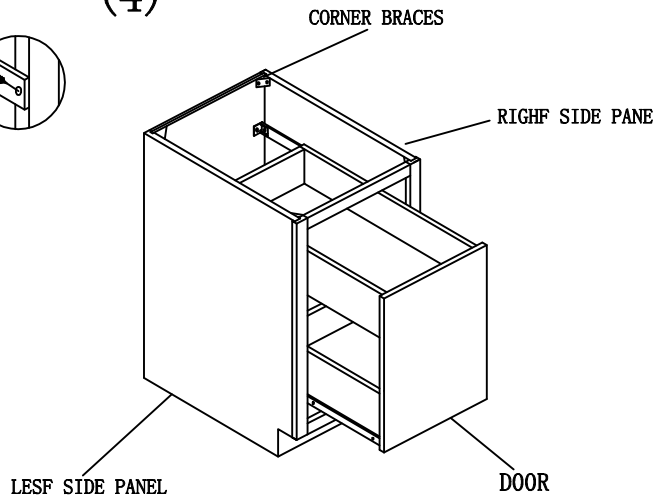

ASSEMBLY INSTRUCTIONS

BMC27

	DIAGRAM	CONNECTING FITTINGS	QTY
①		CAM LOCK SYSTEM	10ps
②		CAM LOCK SYSTEM	10ps
③		SHELF SUPPORT	
④		SLIDE RAIL	1ps
⑤		CORNER BRACES	4ps
⑥		CORNER BRACES SCREWS(ϕ4*16mm)	14ps

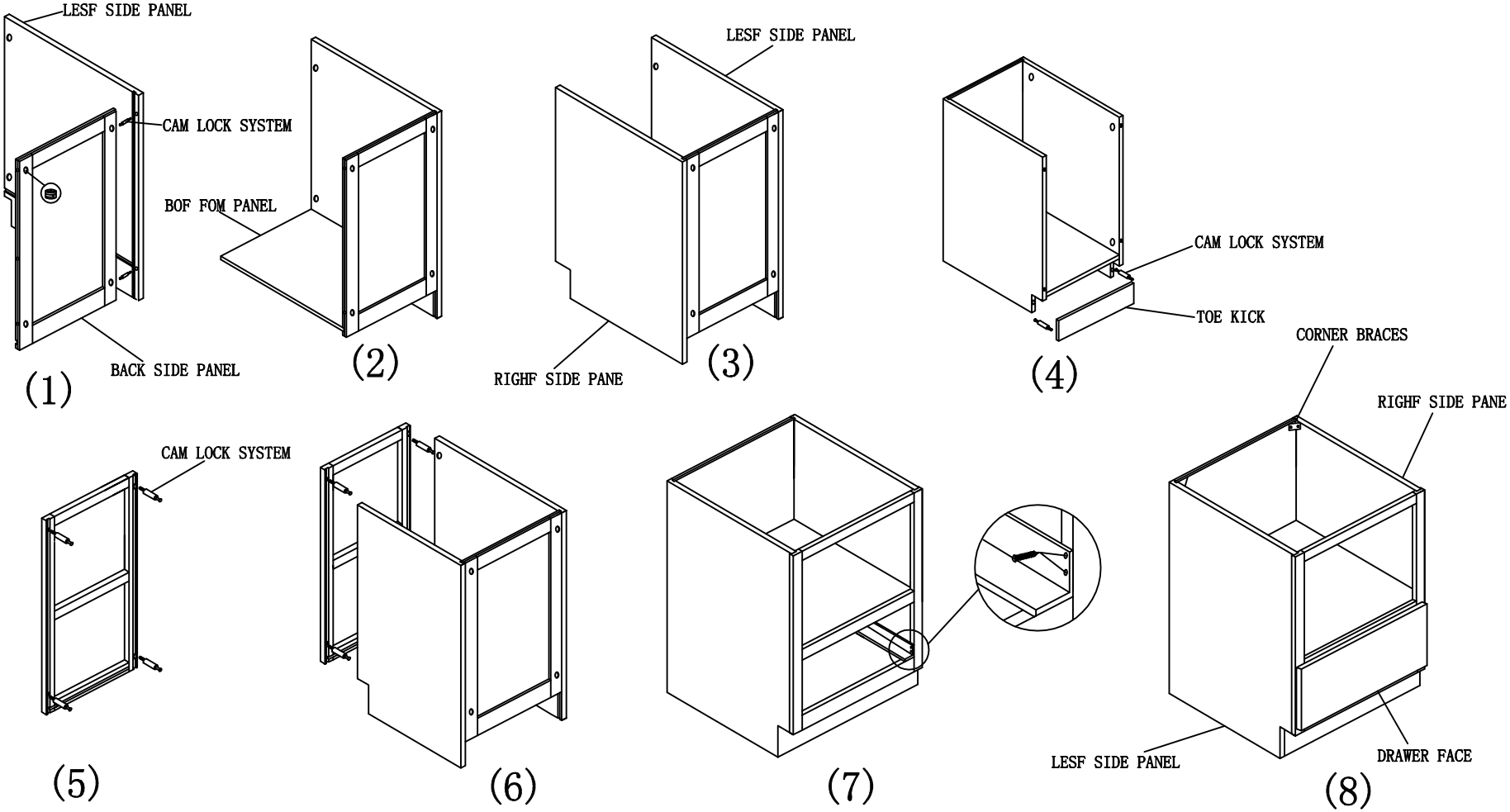

ASSEMBLY INSTRUCTIONS

VSDBD2421 VSBD2721

	DIAGRAM	CONNECTING FITTINGS	QTY
①		CAM LOCK SYSTEM	10ps
②		CAM LOCK SYSTEM	10ps
③		SHELF SUPPORT	4ps
④		SLIDE RAIL	1ps
⑤		CORNER BRACES	4ps
⑥		CORNER BRACES SCREWS(ϕ3*12mm)	26ps

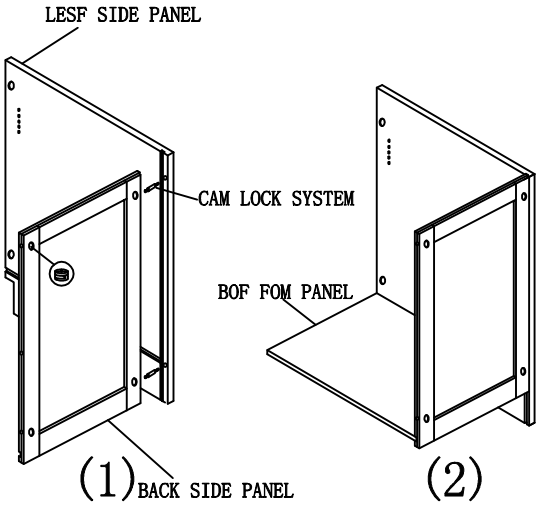

(1)

(2)

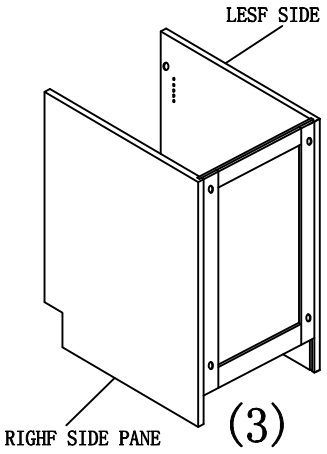

(3)

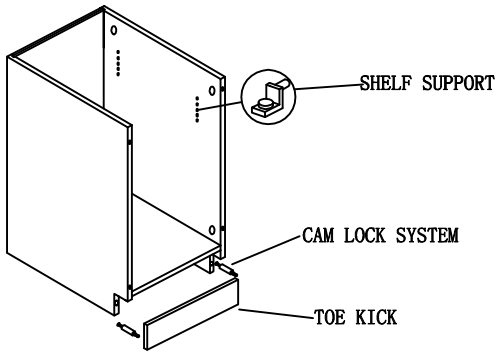

(4)

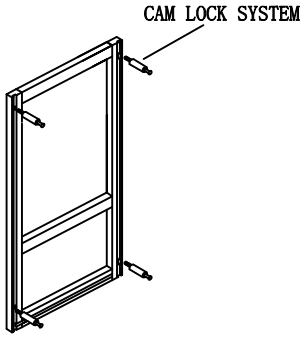

(5)

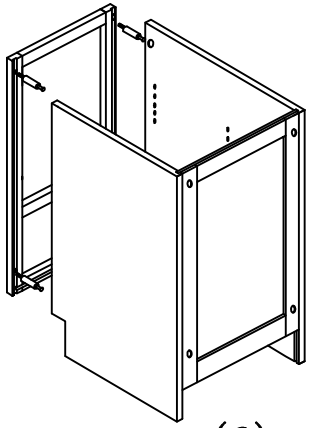

(6)

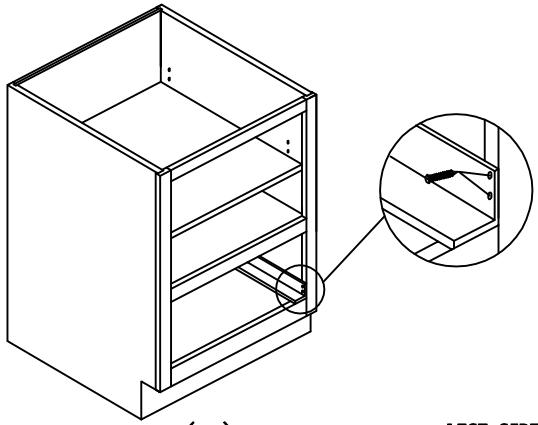

(7)

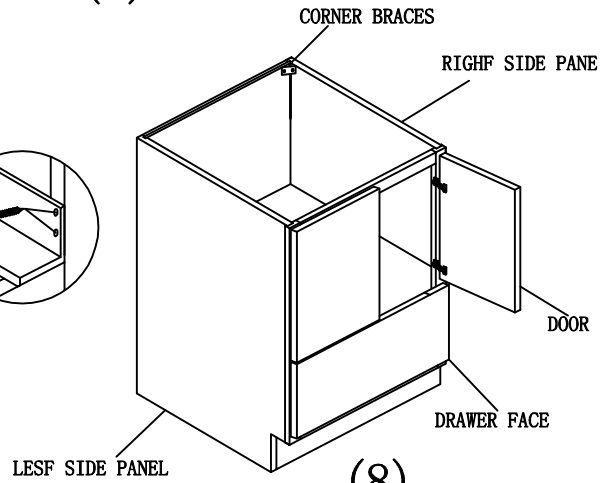

(8)

ASSEMBLY INSTRUCTIONS

BP18

	DIAGRAM	CONNECTING FITTINGS	QTY
①		CAM LOCK SYSTEM	10PS
②		CAM LOCK SYSTEM	10PS
③		SHELF SUPPORT	
④		SLIDE RAIL	1PS
⑤		CORNER BRACES	4PS
⑥		CORNER BRACES SCREWS(ϕ3*12mm)	14PS

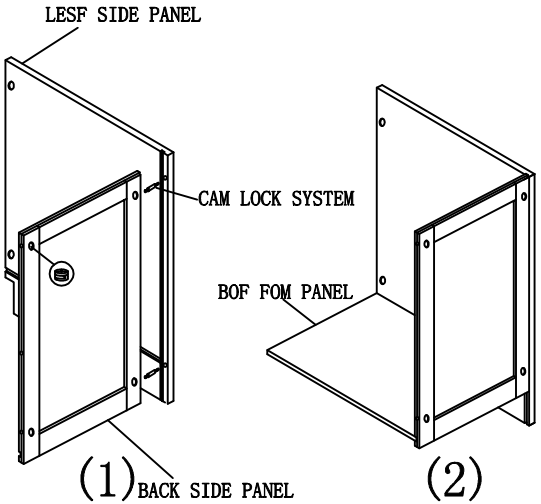

(1)

(2)

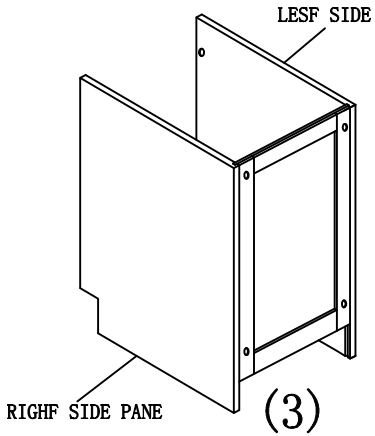

(3)

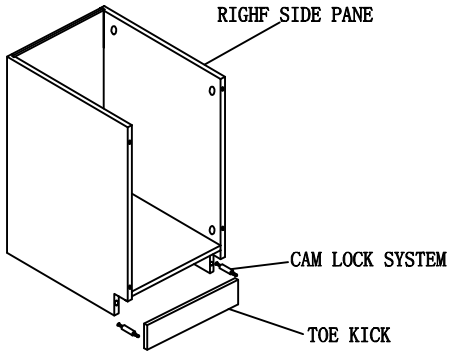

(4)

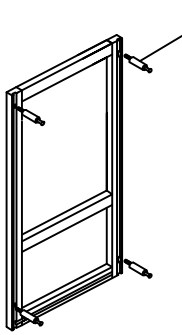

(5)

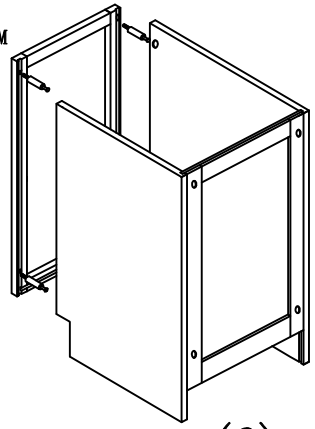
(6)

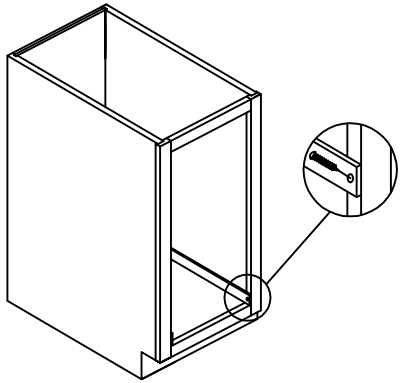
(7)

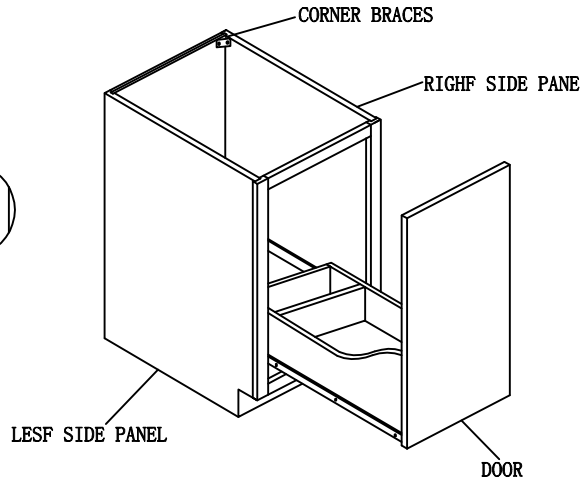

ASSEMBLY INSTRUCTIONS

VSD3621 VSD4221

	DIAGRAM	CONNECTING FITTINGS	QTY
①		CAM LOCK SYSTEM	11ps
②		CAM LOCK SYSTEM	11ps
③		SHELF SUPPORT	
④		SLIDE RAIL	3ps
⑤		CORNER BRACES	4ps
⑥		CORNER BRACES SCREWS(ϕ4*16mm)	38ps

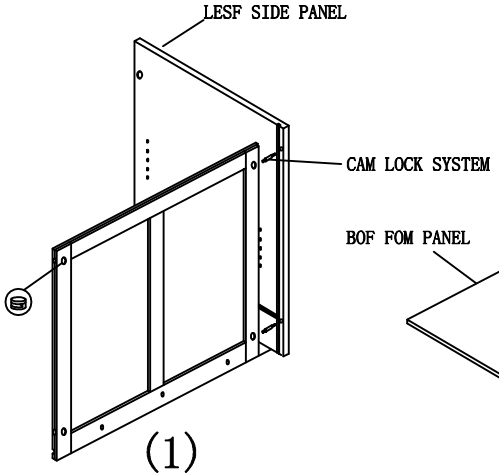

(1)

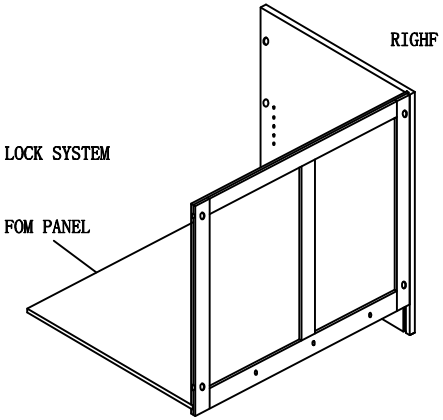

(2)

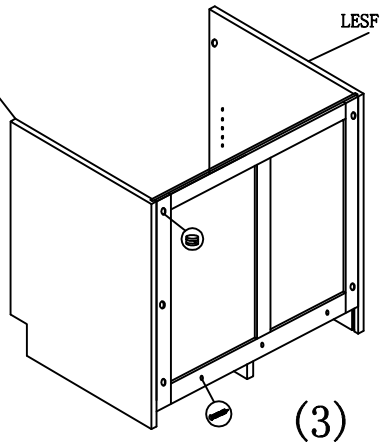

(3)

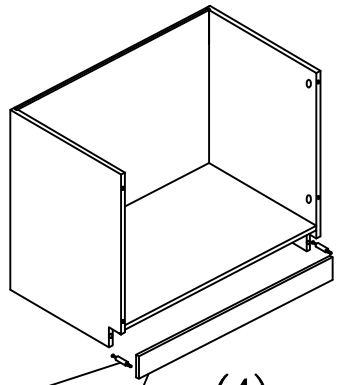

(4)

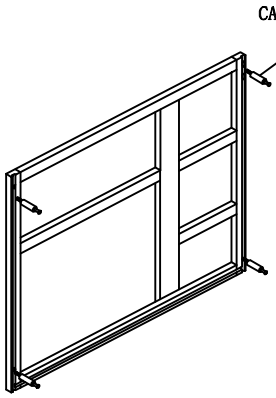

(5)

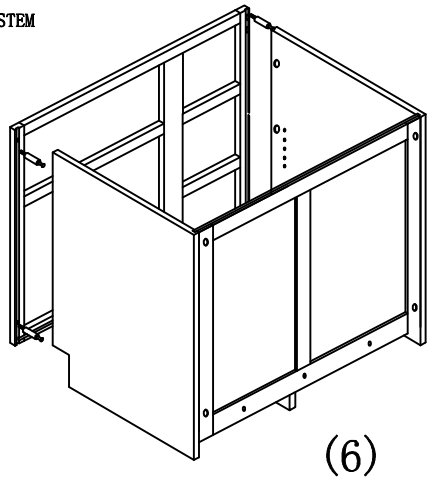

(6)

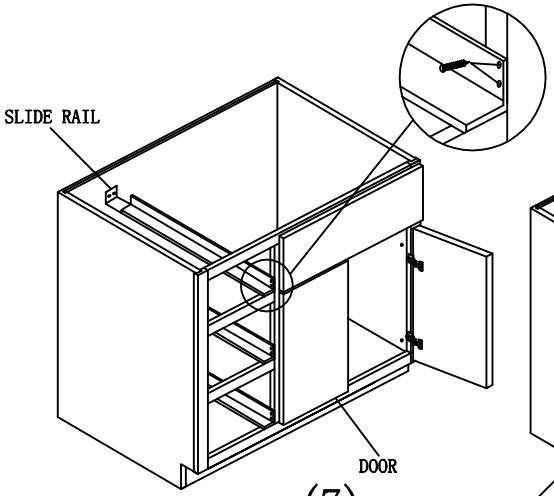

(7)

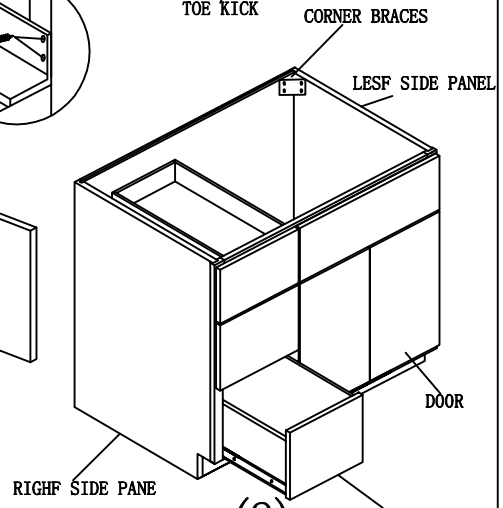

(8)

ASSEMBLY INSTRUCTIONS

VCD6021

	DIAGRAM	CONNECTING FITTINGS	QTY
①		CAM LOCK SYSTEM	11ps
②		CAM LOCK SYSTEM	11ps
③		SHELF SUPPORT	
④		SLIDE RAIL	6ps
⑤		CORNER BRACES	4ps
⑥		CORNER BRACES SCREWS(ϕ4*16mm)	56ps

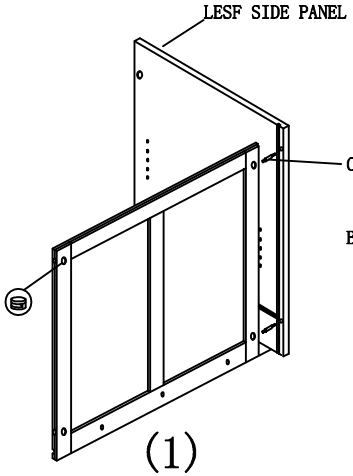

(1)

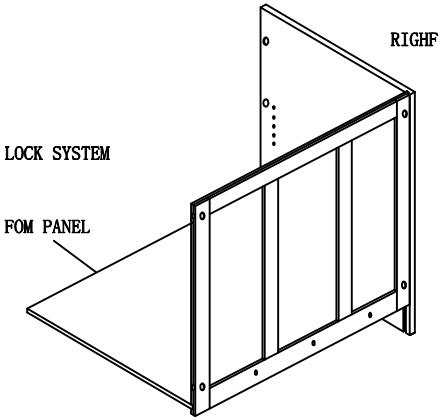

(2)

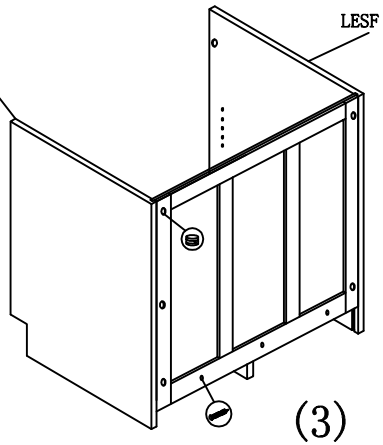

(3)

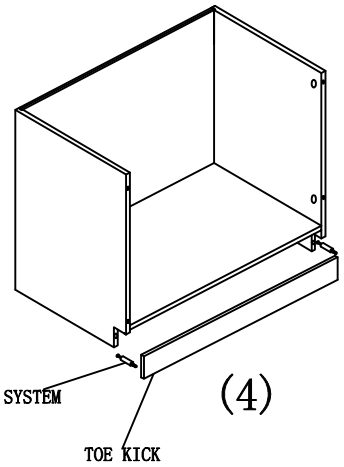

(4)

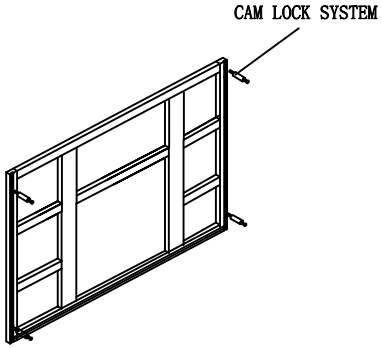

(5)

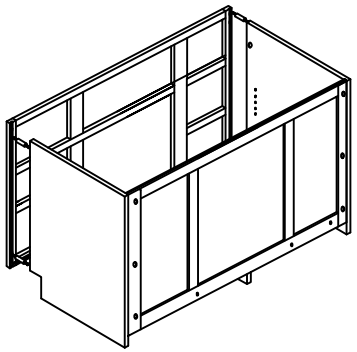

(6)

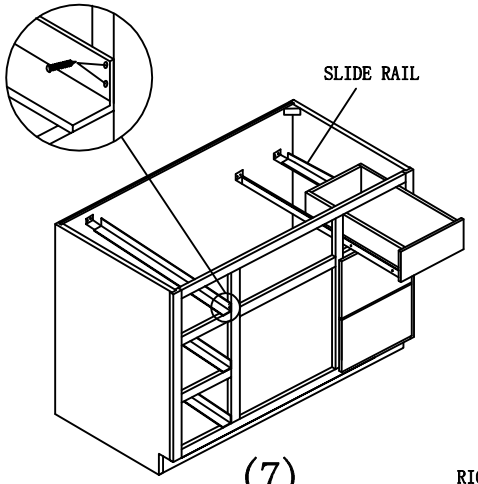

(7)

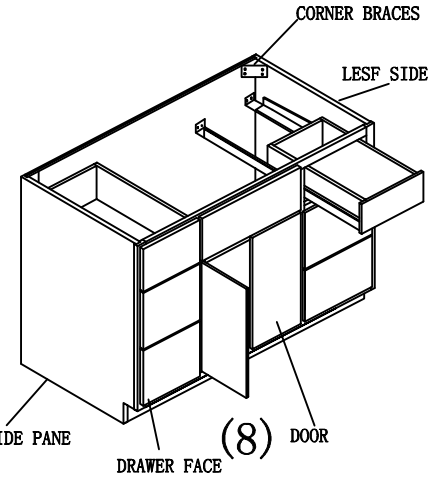

(8)

ASSEMBLY INSTRUCTIONS
VSD6021

	DIAGRAM	CONNECTING FITTINGS	QTY
①		CAM LOCK SYSTEM	11ps
②		CAM LOCK SYSTEM	11ps
③		SHELF SUPPORT	
④		SLIDE RAIL	3ps
⑤		CORNER BRACES	4ps
⑥		CORNER BRACES SCREWS(ϕ4*16mm)	50ps

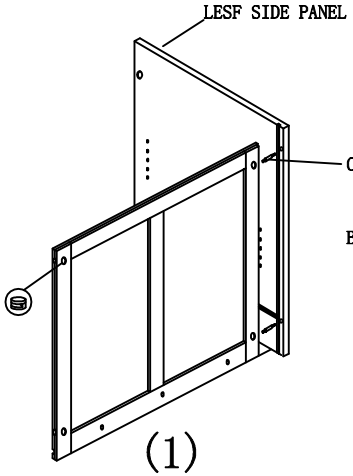

(1)

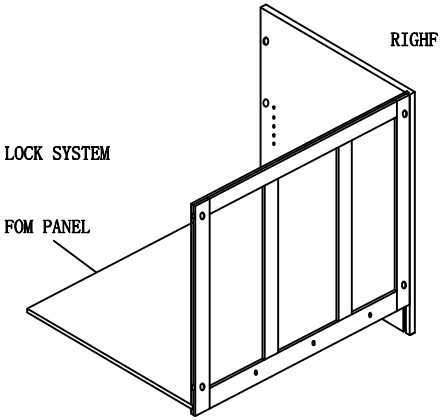

(2)

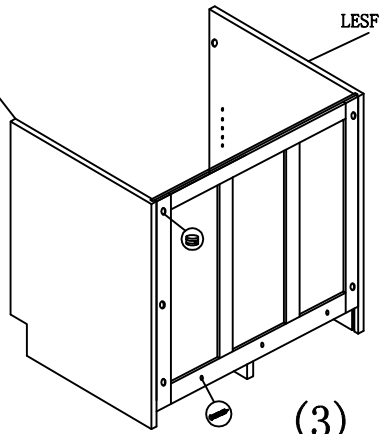

(3)

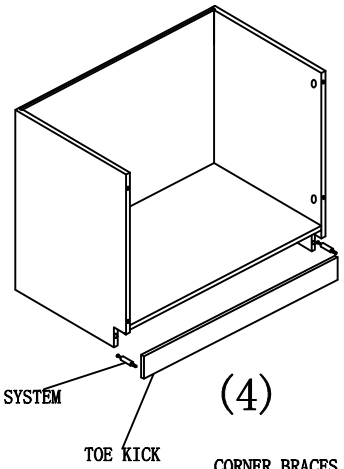

(4)

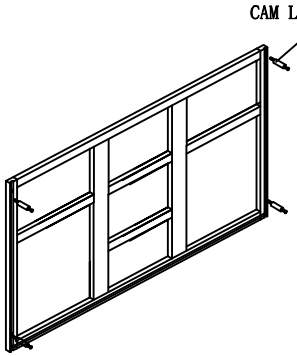

(5)

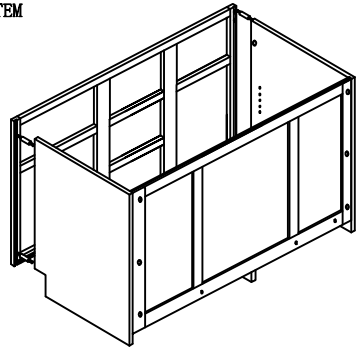
(6)

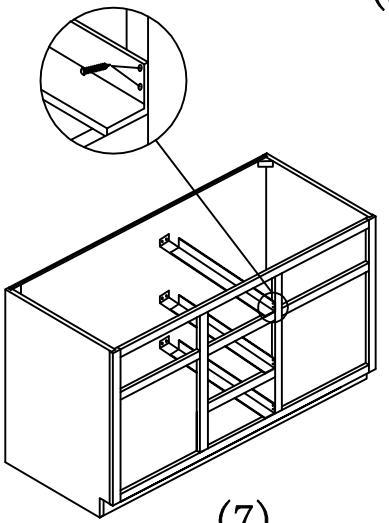
(7)

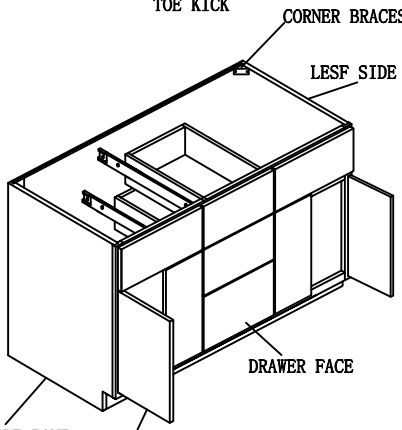

(8)

ASSEMBLY INSTRUCTIONS

B33 B36 B42

	DIAGRAM	CONNECTING FITTINGS	QTY
①		CAM LOCK SYSTEM	11ps
②		CAM LOCK SYSTEM	11ps
③		SHELF SUPPORT	4ps
④		SLIDE RAIL	2ps
⑤		CORNER BRACES	4ps
⑥		CORNER BRACES SCREWS(ϕ4*16mm)	28ps

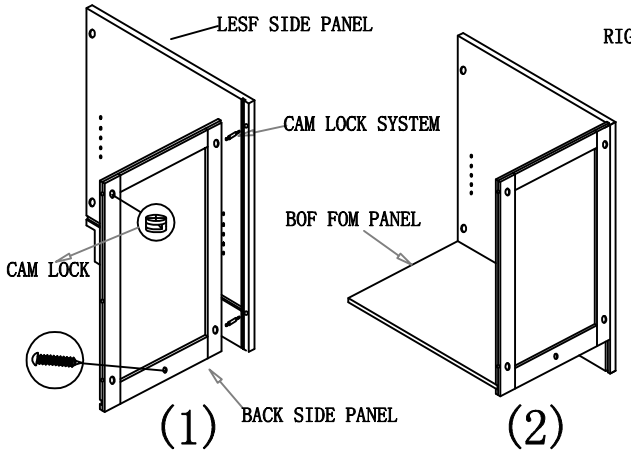

(1)

(2)

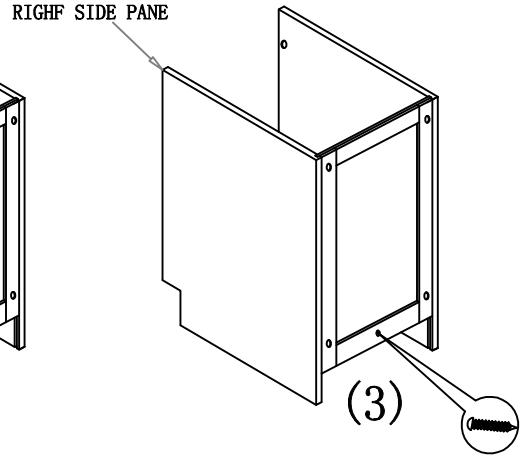

(3)

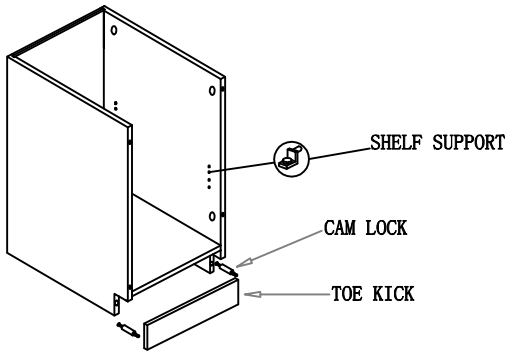

(4)

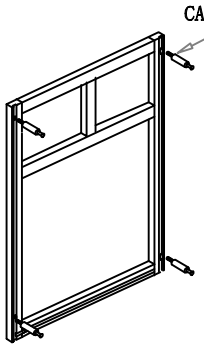

(5)

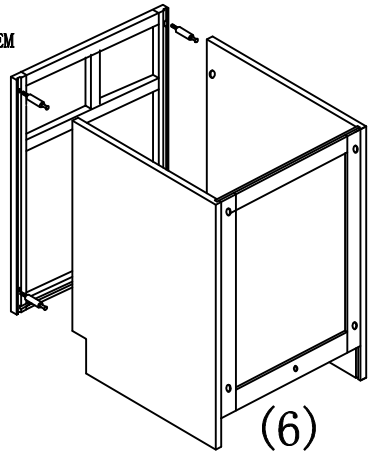

(6)

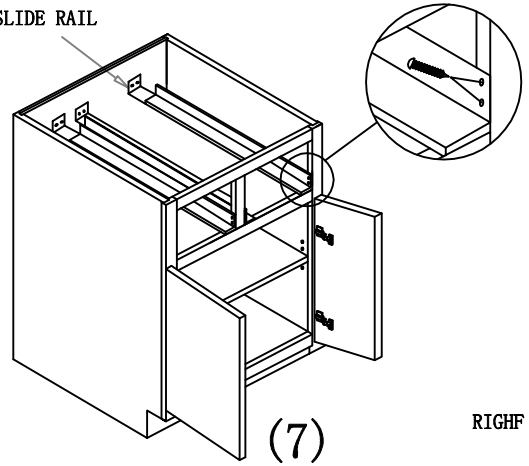

(7)

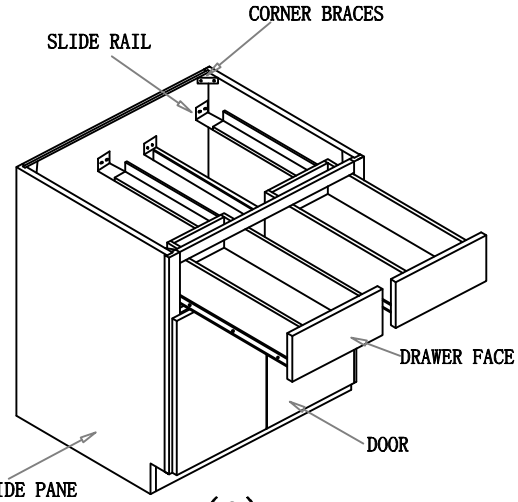

(8)

ASSEMBLY INSTRUCTIONS
DB36-2P

	DIAGRAM	CONNECTING FITTINGS	QTY
①		CAM LOCK SYSTEM	11ps
②		CAM LOCK SYSTEM	11ps
③		SHELF SUPPORT	
④		SLIDE RAIL	2ps
⑤		CORNER BRACES	4ps
⑥		CORNER BRACES SCREWS(ϕ4*16mm)	24ps

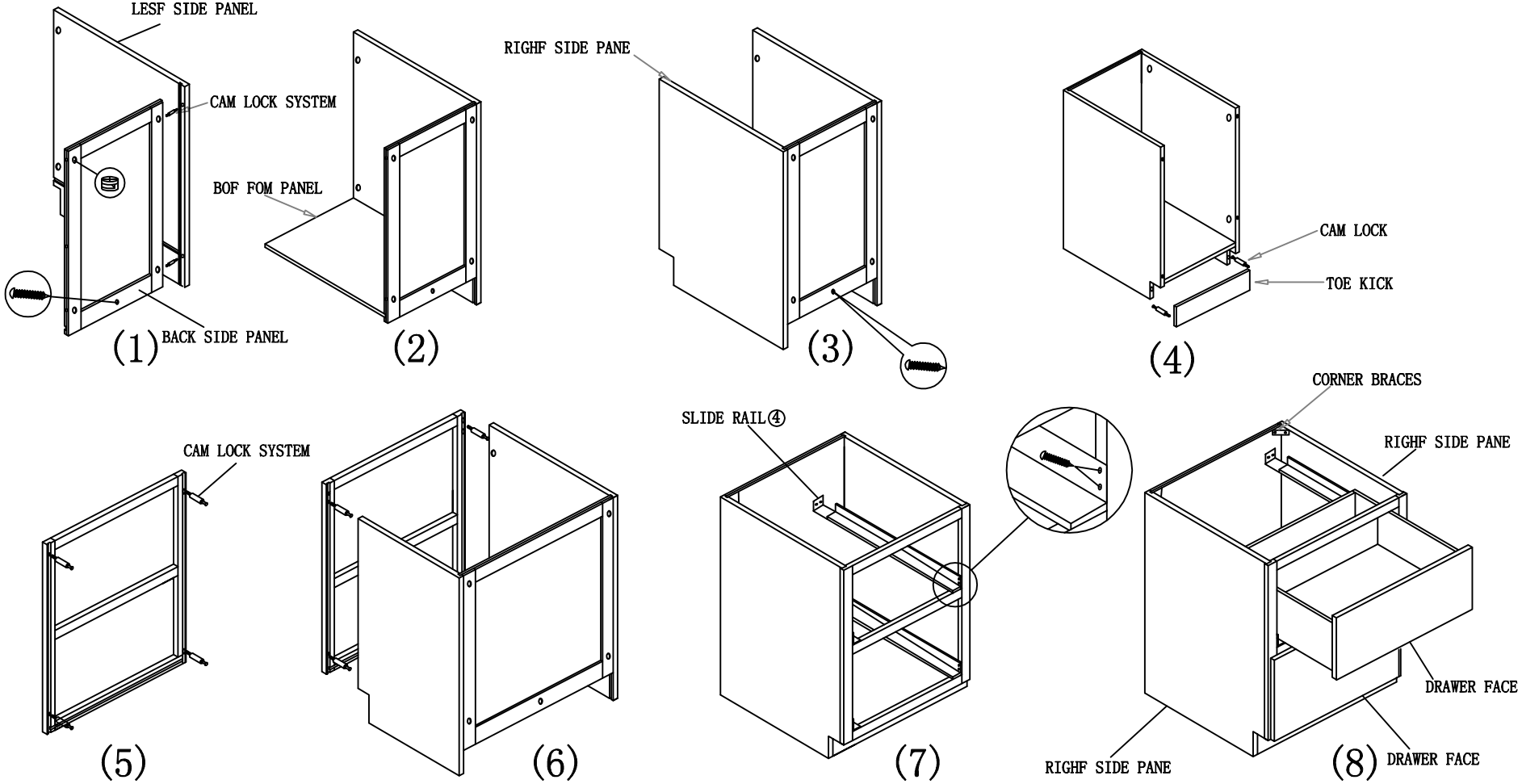

ASSEMBLY INSTRUCTIONS

BLS33 BLS36

	DIAGRAM	CONNECTING FITTINGS	QTY
①		CAM LOCK SYSTEM	20PS
②		CAM LOCK SYSTEM	20PS
③		CORNER BRACES	4PS
④	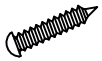	CORNER BRACES SCREWS(ϕ4*16mm)	14ps

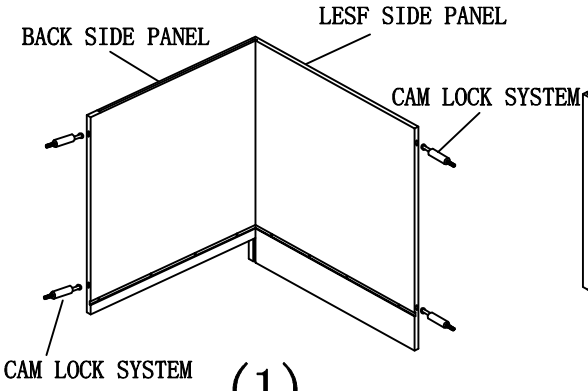

(1)

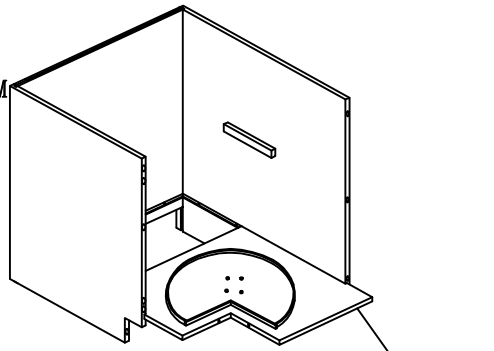

(2)

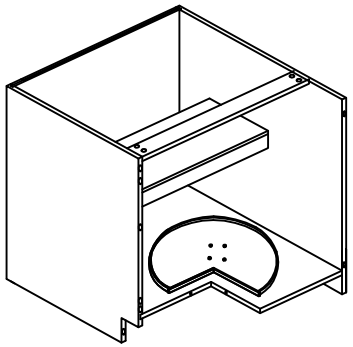

(3)

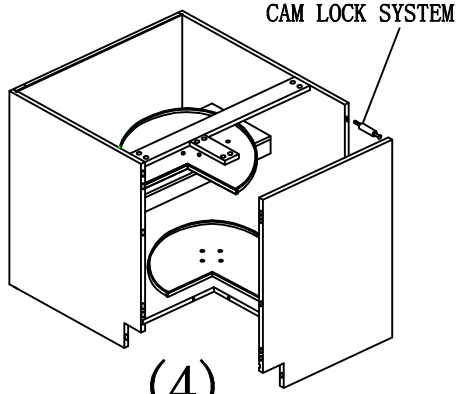

(4)

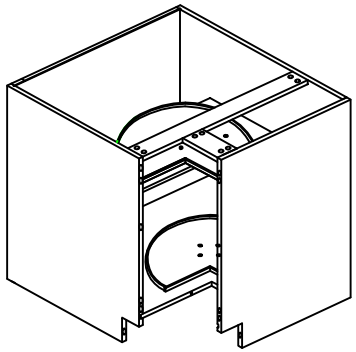

(5)

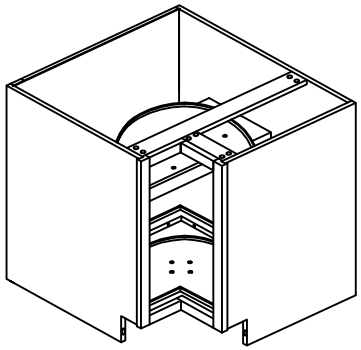

(6)

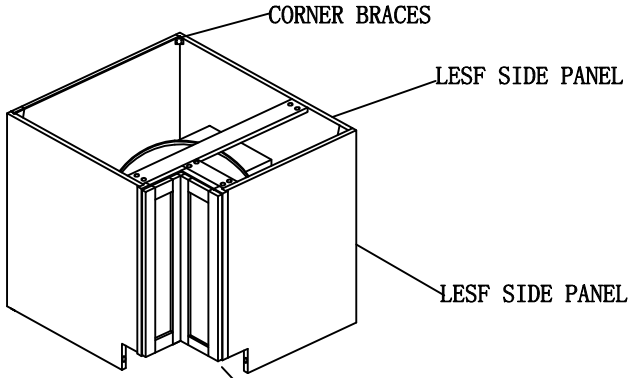

(7)

ASSEMBLY INSTRUCTIONS

BLSDB33 BLSD36

	DIAGRAM	CONNECTING FITTINGS	QTY
①		CAM LOCK SYSTEM	20PS
②		CAM LOCK SYSTEM	20PS
③		CORNER BRACES	4PS
④	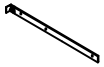	SLIDE RAIL	6ps
⑤	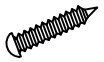	CORNER BRACES SCREWS(ϕ4*16mm)	26ps

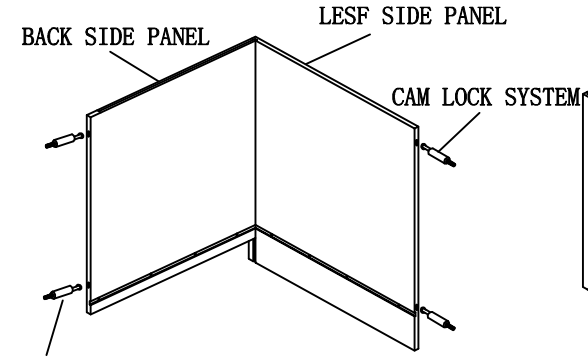

(1)

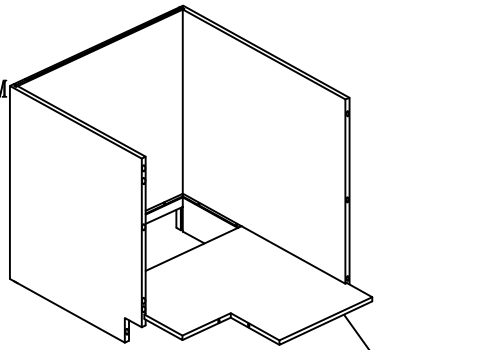

(2)

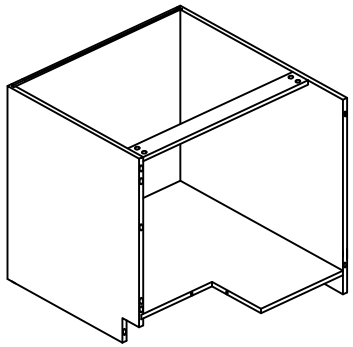

(3)

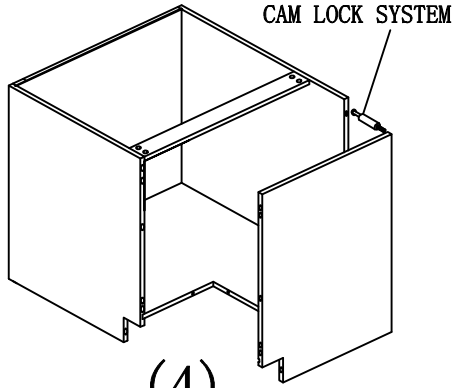

(4)

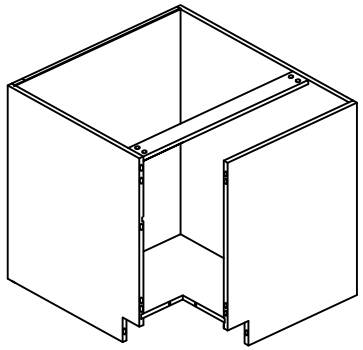

(5)

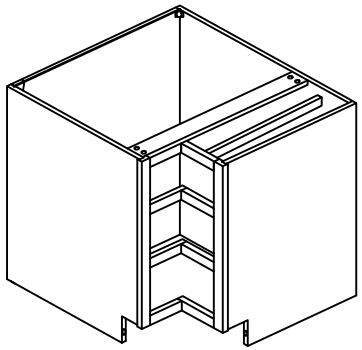

(6)

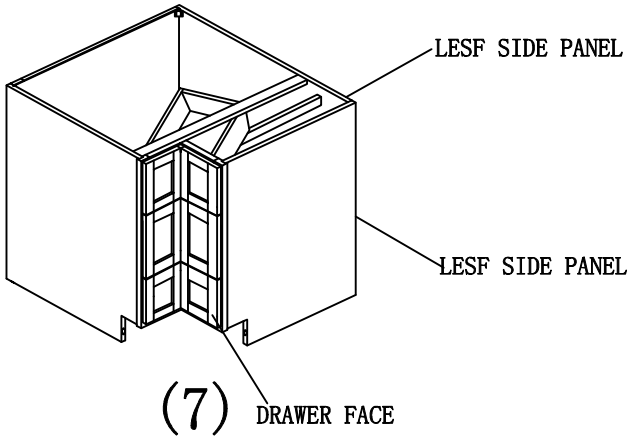

(7)

ASSEMBLY INSTRUCTIONS

BLSD33 BLSD36

	DIAGRAM	CONNECTING FITTINGS	QTY
①		CAM LOCK SYSTEM	20PS
②		CAM LOCK SYSTEM	20PS
③		CORNER BRACES	4PS
④	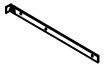	SLIDE RAIL	6ps
⑤	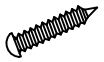	CORNER BRACES SCREWS(ϕ4*16mm)	26ps

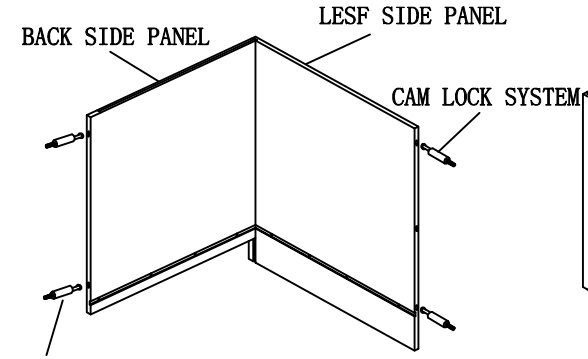

(1)

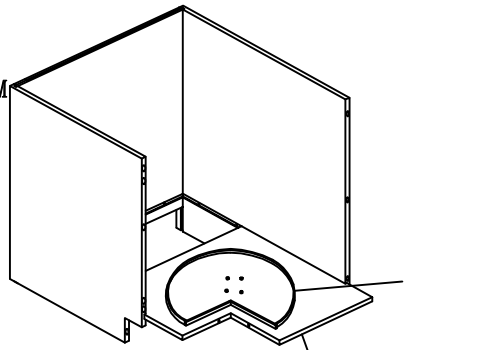

(2)

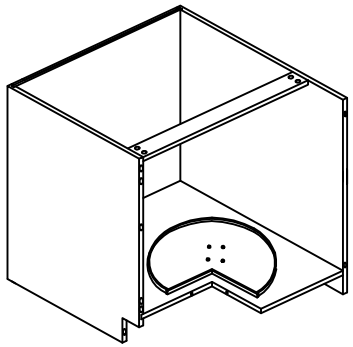

(3)

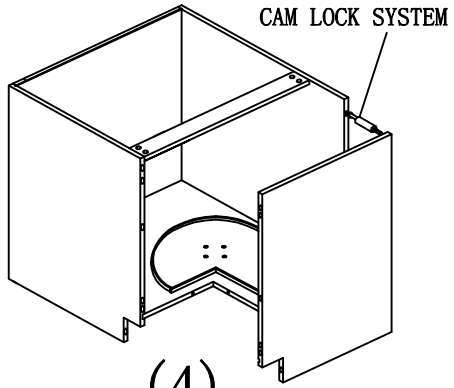

(4)

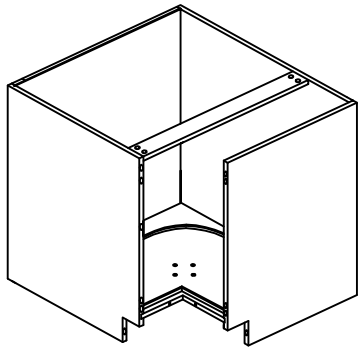

(5)

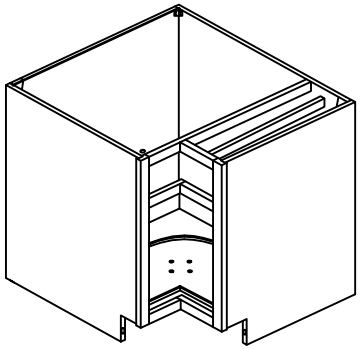

(6)

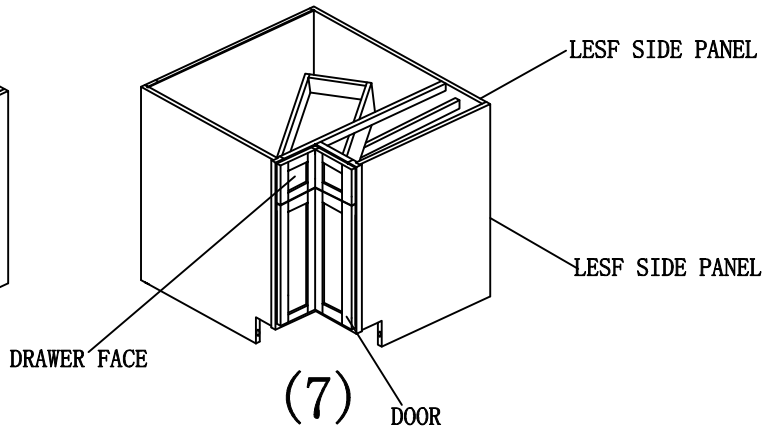

(7)

ASSEMBLY INSTRUCTIONS
BCC24

	DIAGRAM	CONNECTING FITTINGS	QTY
①		CAM LOCK SYSTEM	10PS
②		CAM LOCK SYSTEM	10PS
③		CORNER BRACES	2PS
④		SLIDE RAIL	
⑤		CORNER BRACES SCREWS(ϕ4*16mm)	16ps

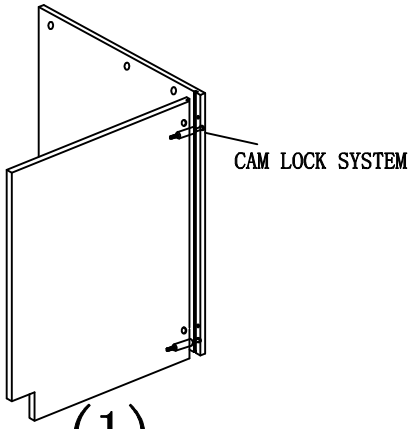

(1)

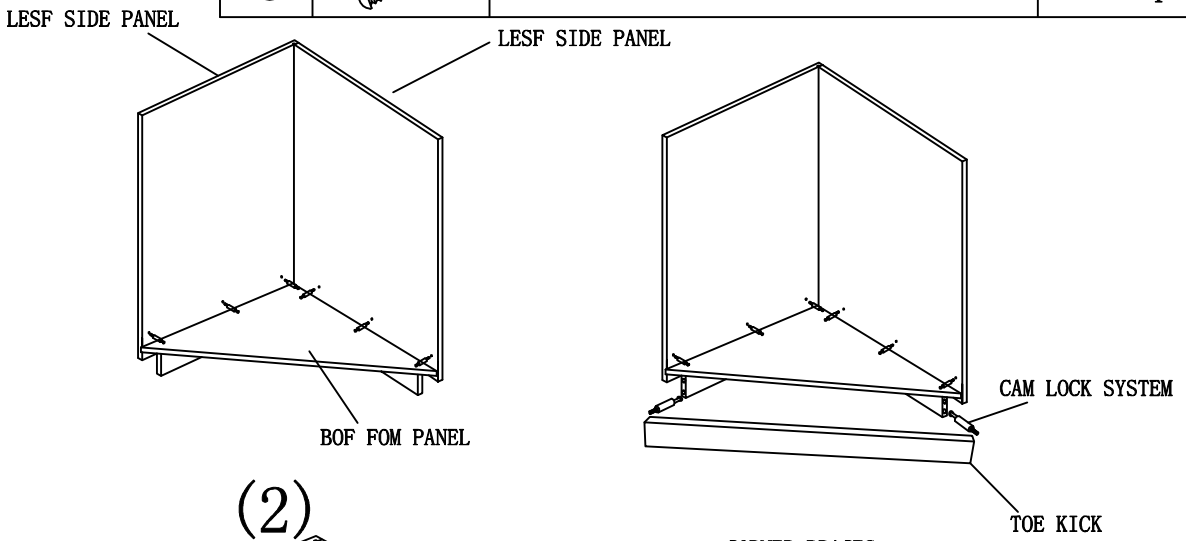

(2)

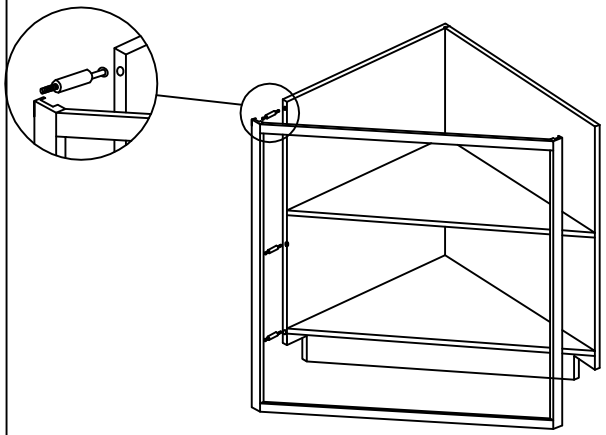

(3)

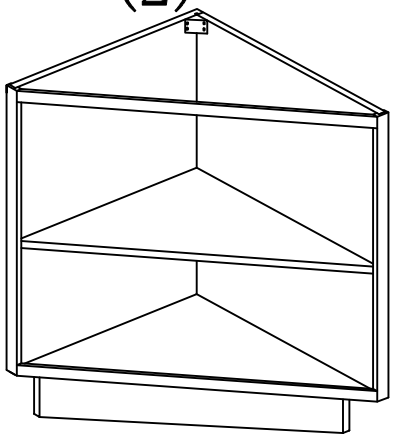

(4)

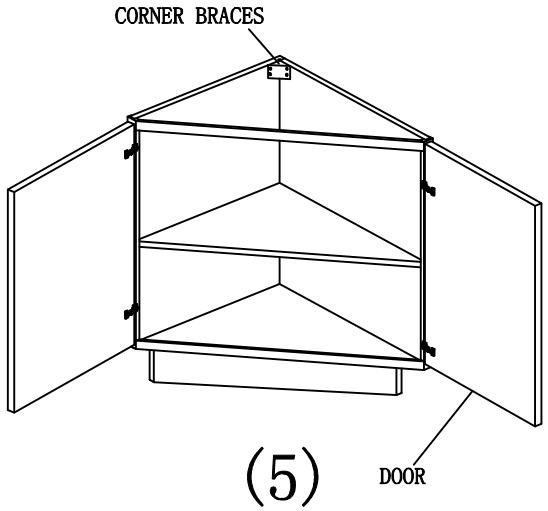

(5)

ASSEMBLY INSTRUCTIONS

DCSB39

	DIAGRAM	CONNECTING FITTINGS	QTY
①		CAM LOCK SYSTEM	12PS
②		CAM LOCK SYSTEM	12PS
③		CORNER BRACES	2PS
④	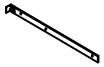	SLIDE RAIL	
⑤	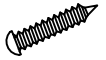	CORNER BRACES SCREWS(ϕ4*16mm)	10ps

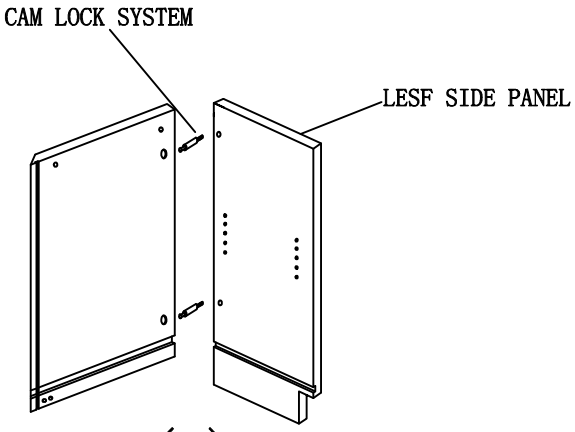

(1)

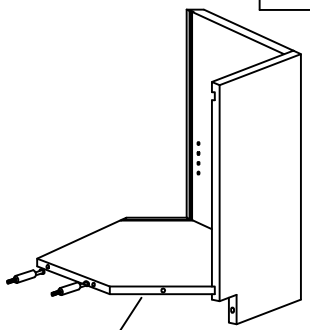

(2)

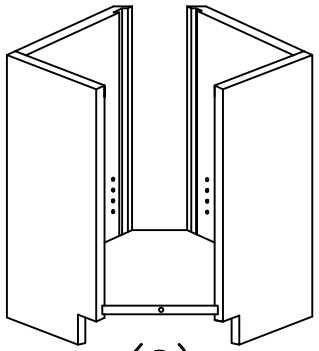

(3)

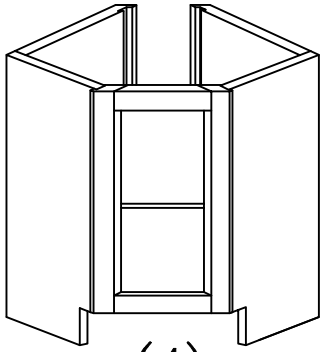

(4)

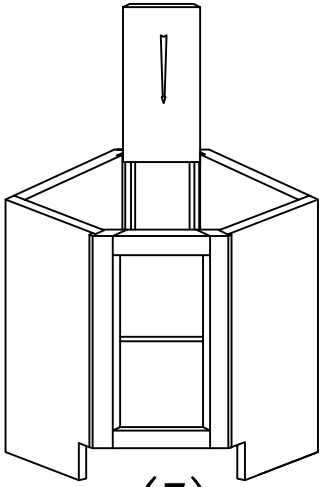

(5)

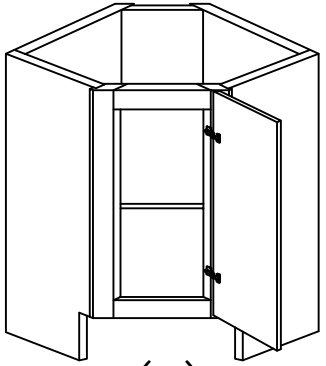

(6)

ASSEMBLY INSTRUCTIONS
VD30

	DIAGRAM	CONNECTING FITTINGS	QTY
①		CAM LOCK SYSTEM	12PS
②		CAM LOCK SYSTEM	12PS
③		CORNER BRACES	4PS
④		SLIDE RAIL	1PS
⑤		CORNER BRACES SCREWS(ϕ4*16mm)	22PS

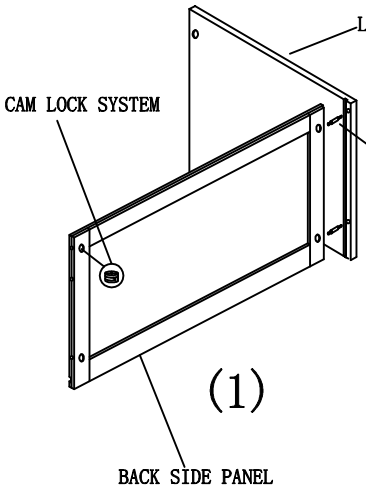

(1)

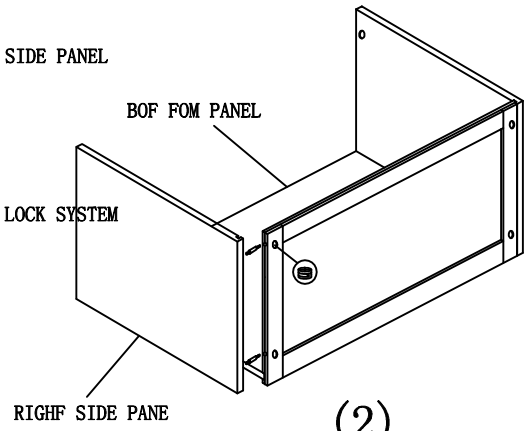

(2)

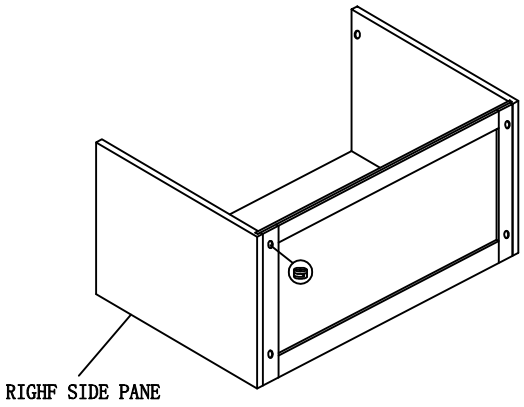

(3)

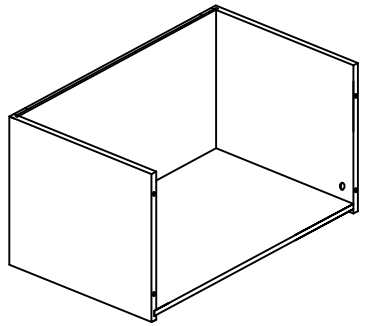

(4)

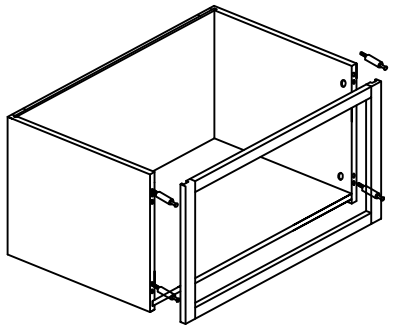

(5)

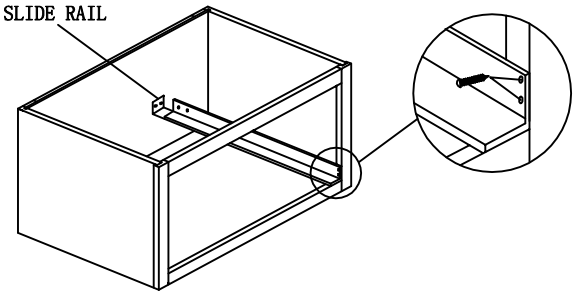

(6)

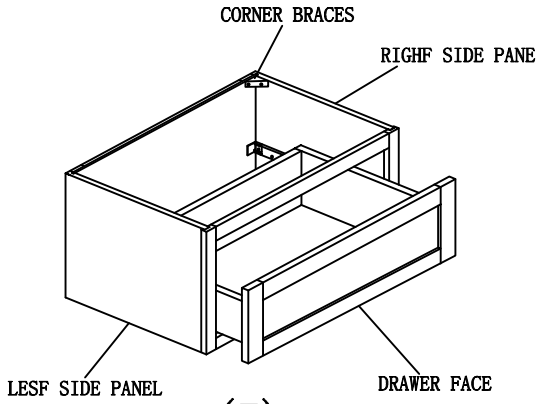

(7)

ASSEMBLY INSTRUCTIONS

BES0924

DIAGRAM	CONNECTING FITTINGS	QTY
	CAM LOCK SYSTEM	18
	CAM LOCK SYSTEM	18

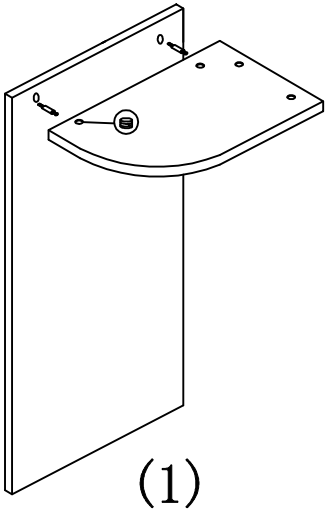

(1)

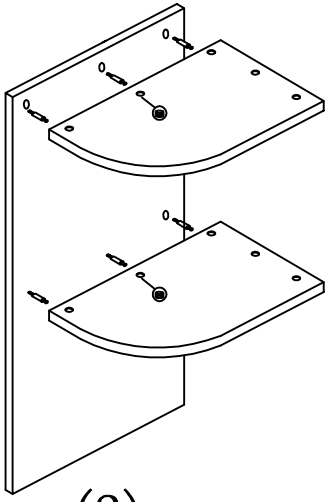

(2)

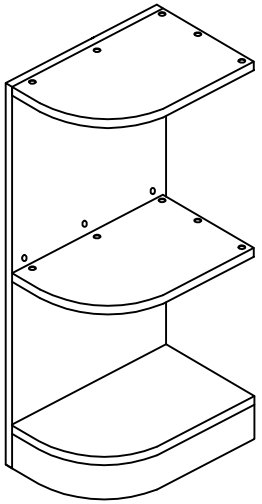

(3)

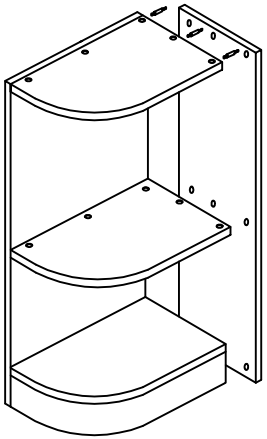

(4)

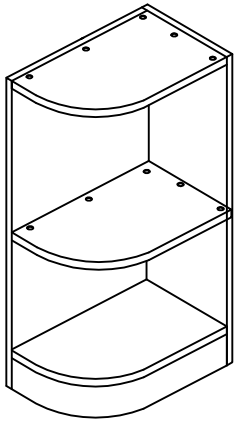

(5)

ASSEMBLY INSTRUCTIONS
W3012-3024

	DIAGRAM	CONNECTING FITTINGS	QTY
①		CAM LOCK SYSTEM	12PS
②		CAM LOCK SYSTEM	12PS

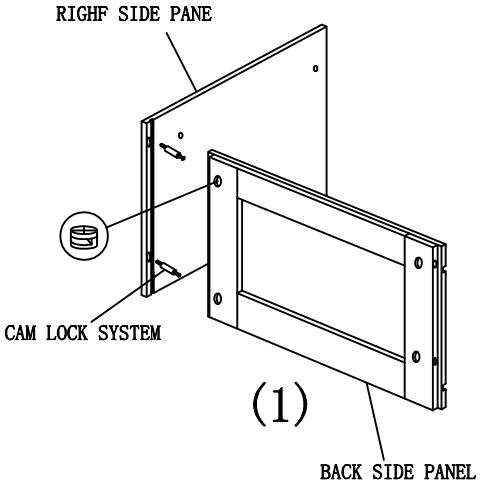

(1)

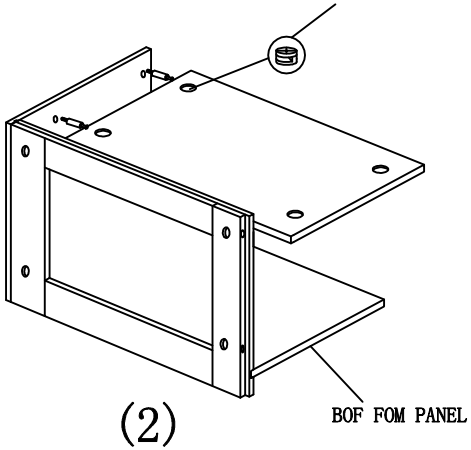

(2)

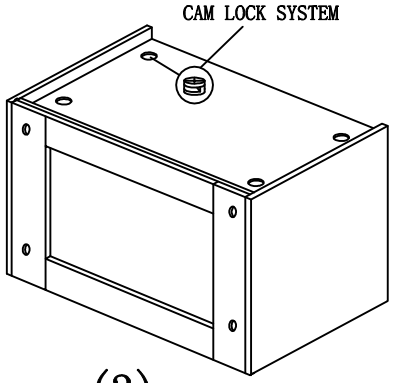

(3)

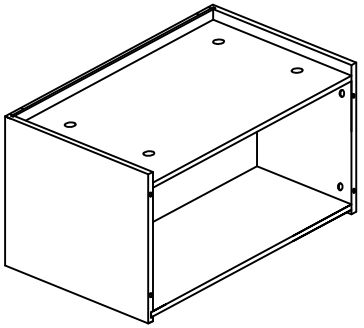

(4)

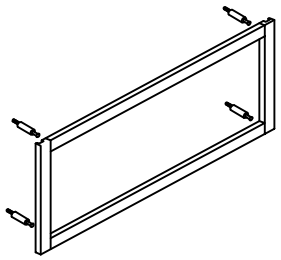

(5)

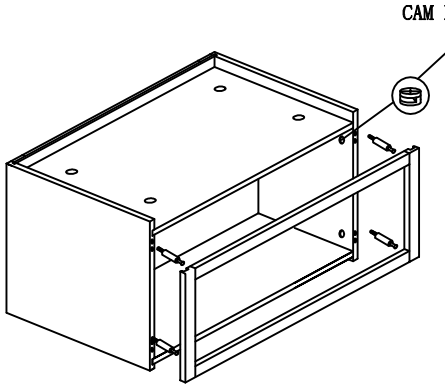

(6)

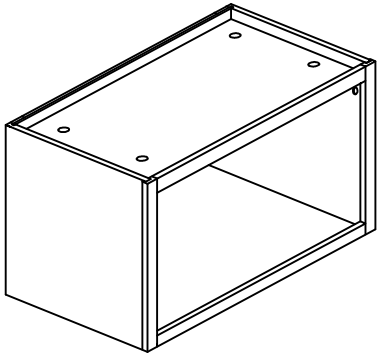

(7)

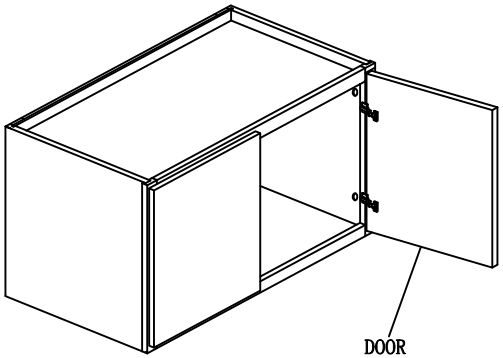

(8)

ASSEMBLY INSTRUCTIONS
W3612-3624 W3912-3924

	DIAGRAM	CONNECTING FITTINGS	QTY
①		CAM LOCK SYSTEM	14PS
②		CAM LOCK SYSTEM	14PS

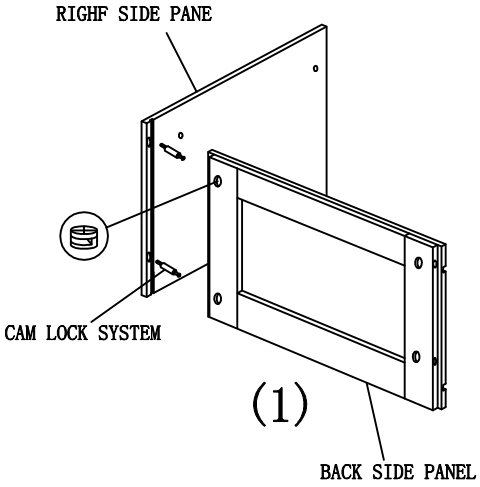

(1)

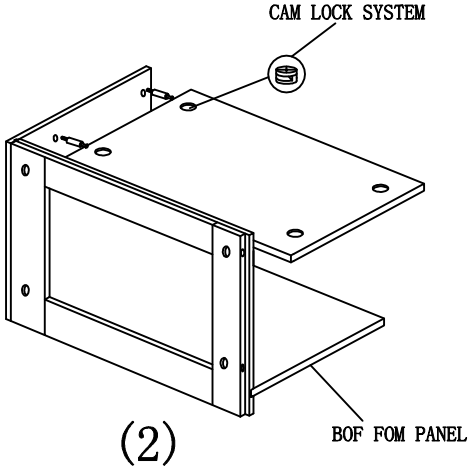

(2)

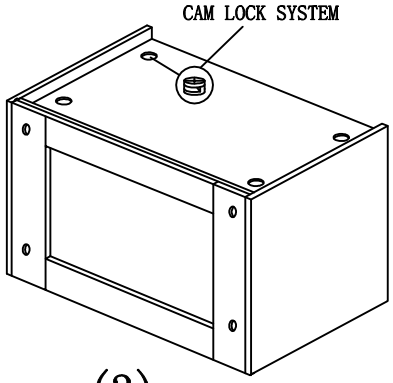

(3)

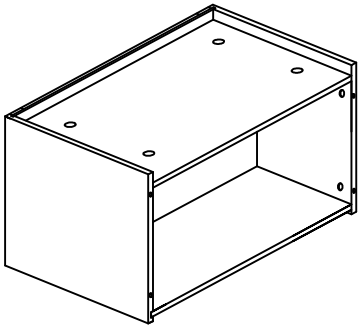

(4)

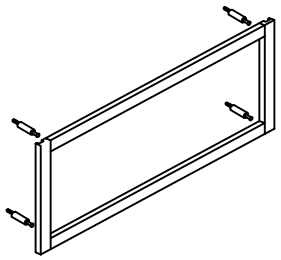

(5)

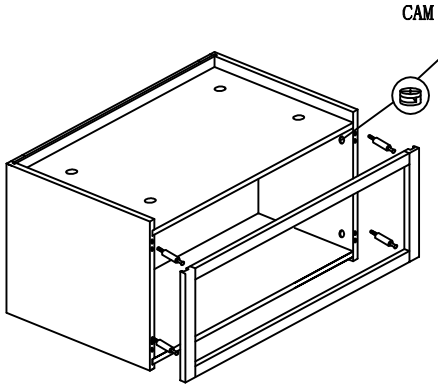

(6)

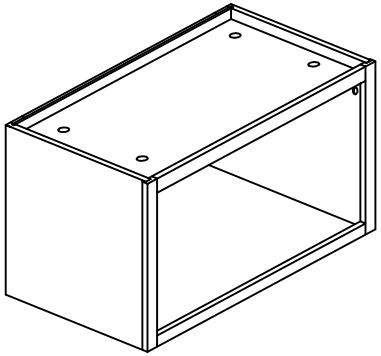

(7)

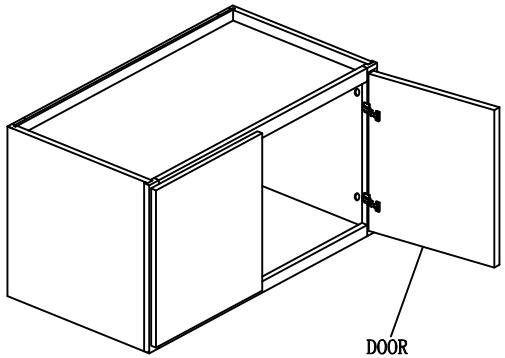

(8)

ASSEMBLY INSTRUCTIONS

W0930-0942 W1230-1242

W1530-1542 W1830-1842

	DIAGRAM	CONNECTING FITTINGS	QTY
①		CAM LOCK SYSTEM	12PS
②		CAM LOCK SYSTEM	12PS
③		SHELF SUPPORT	8ps

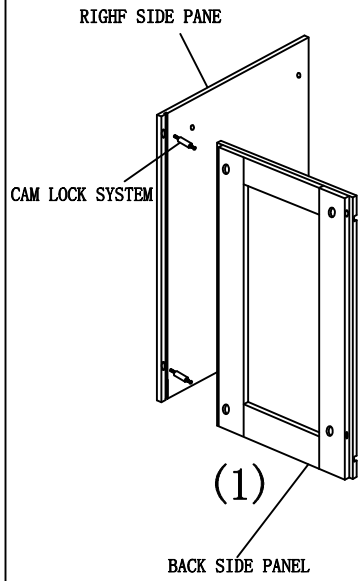

(1)

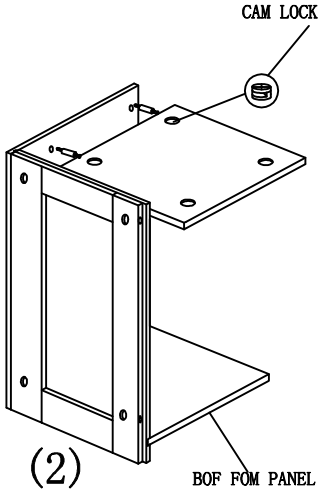

(2)

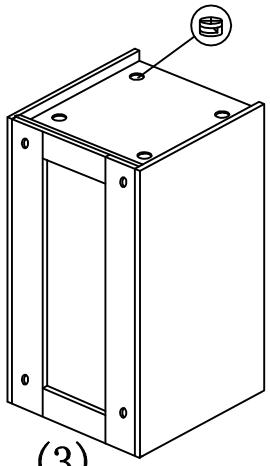

(3)

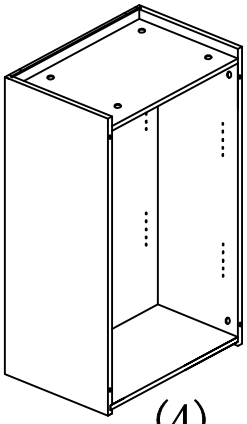

(4)

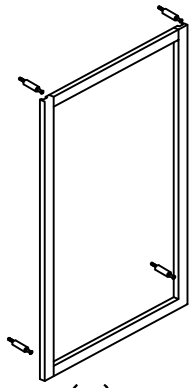

(5)

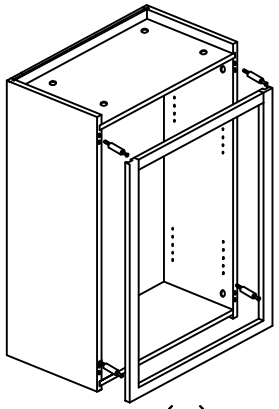

(6)

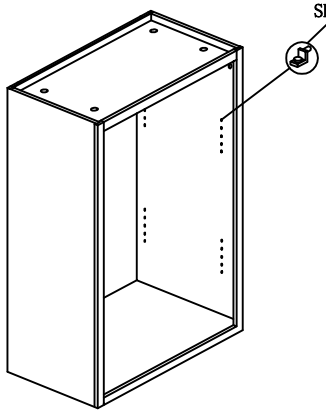

(7)

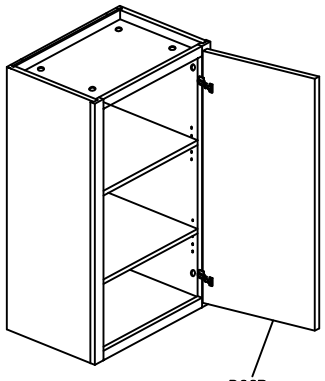

(8)

ASSEMBLY INSTRUCTIONS
W2430-3930

	DIAGRAM	CONNECTING FITTINGS	QTY
①		CAM LOCK SYSTEM	12PS
②		CAM LOCK SYSTEM	12PS
③		SHELF SUPPORT	8ps

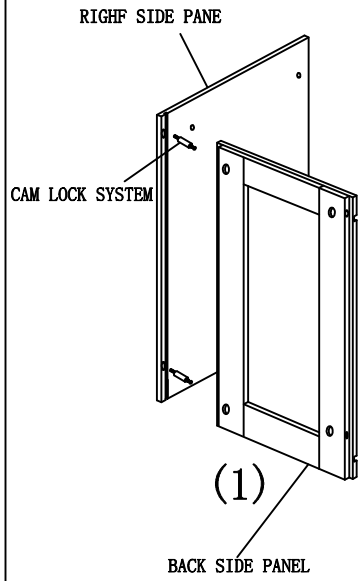

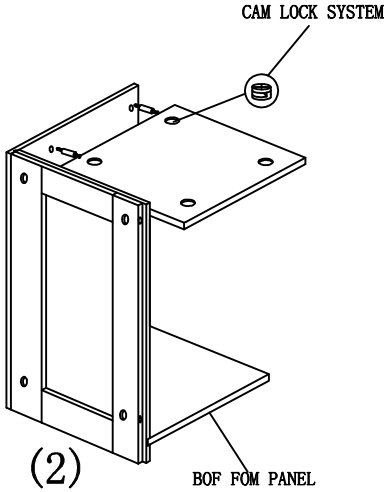

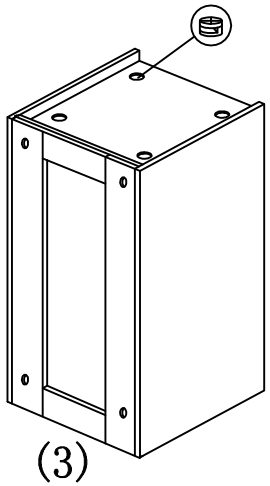

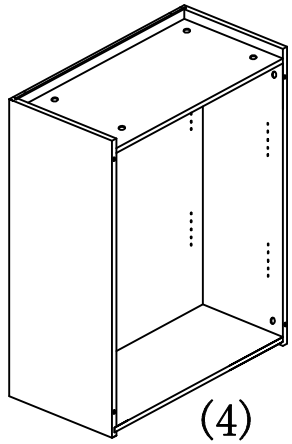

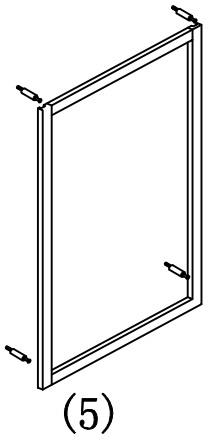

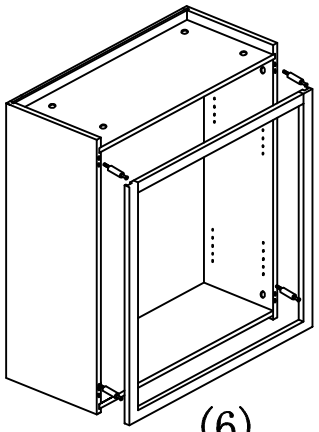

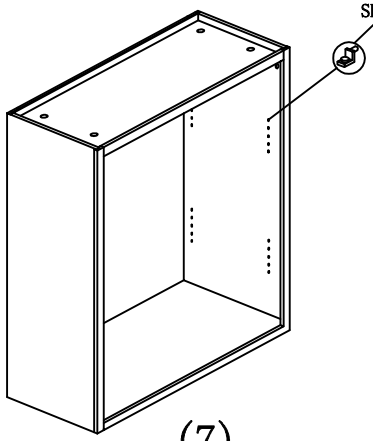

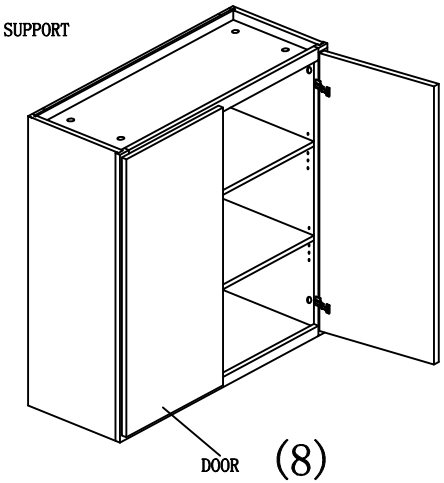

ASSEMBLY INSTRUCTIONS
W2436-3936 W2442-3942

	DIAGRAM	CONNECTING FITTINGS	QTY
①		CAM LOCK SYSTEM	14PS
②		CAM LOCK SYSTEM	14PS
③		SHELF SUPPORT	8ps

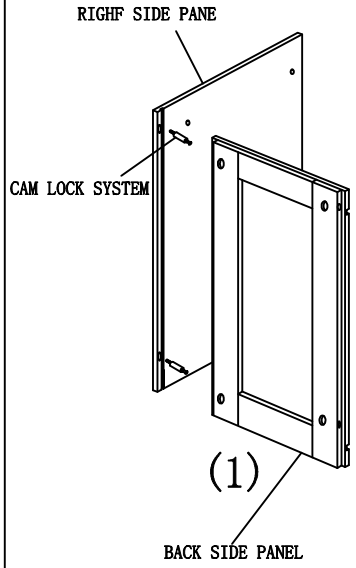

(1)

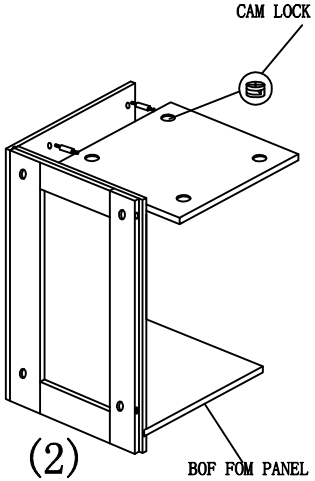

(2)

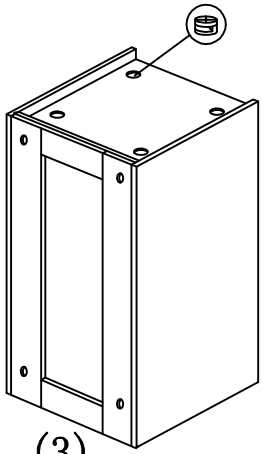
(3)

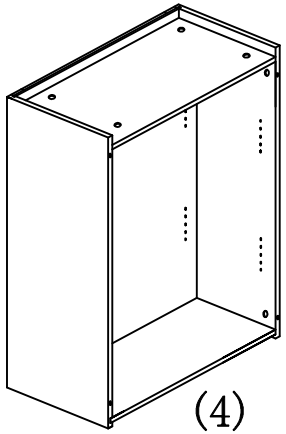
(4)

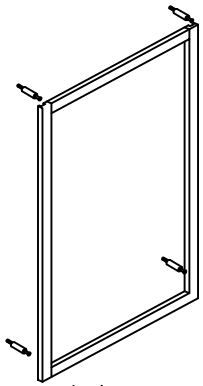
(5)

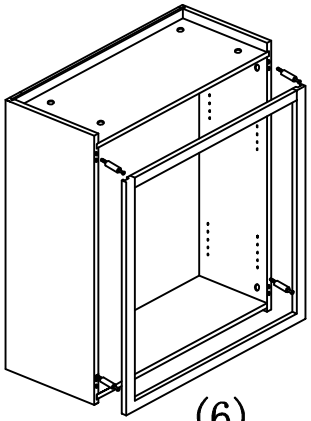
(6)

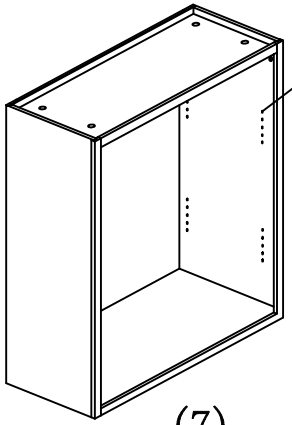

(7)

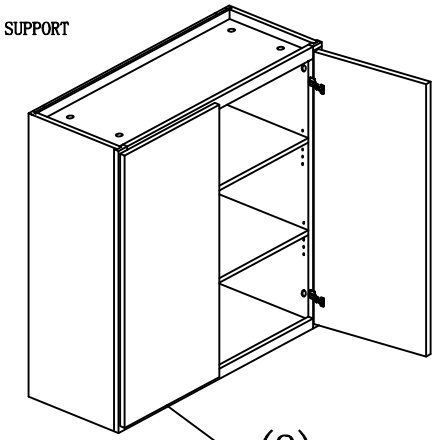

(8)

ASSEMBLY INSTRUCTIONS

W361224-362424

	DIAGRAM	CONNECTING FITTINGS	QTY
①		CAM LOCK SYSTEM	12PS
②		CAM LOCK SYSTEM	12PS

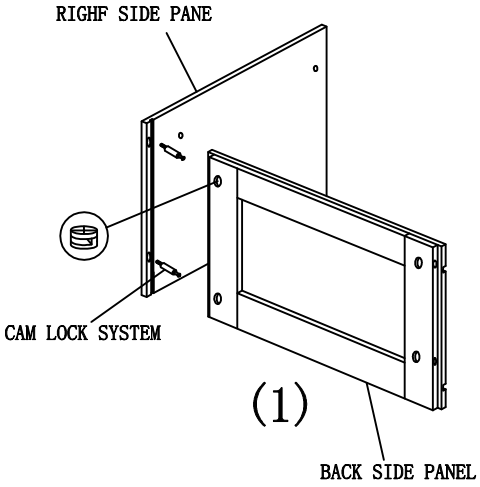

(1)

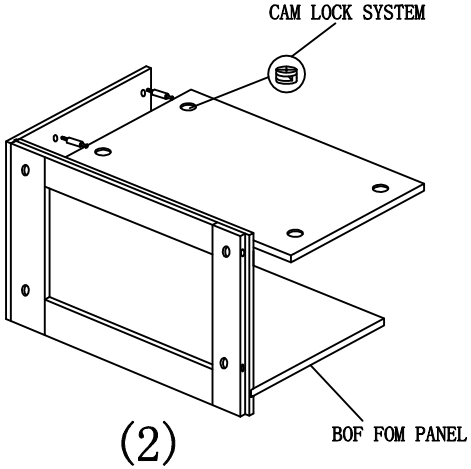

(2)

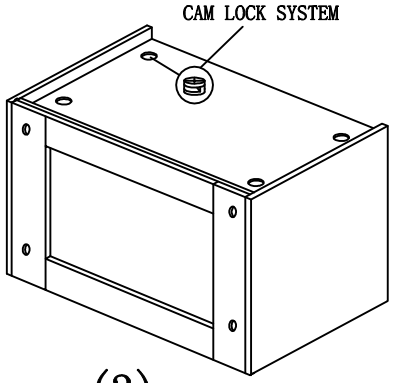

(3)

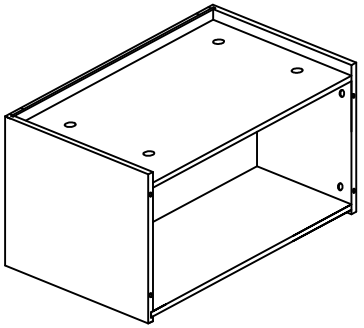

(4)

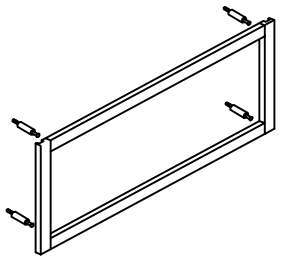

(5)

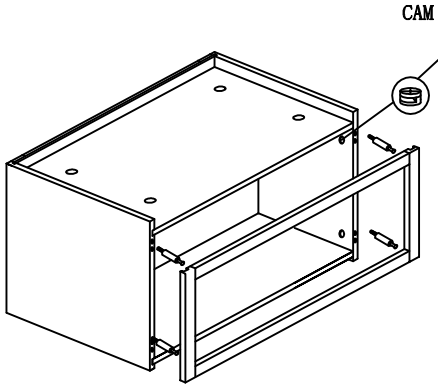

(6)

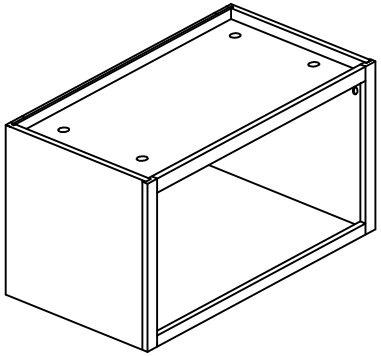

(7)

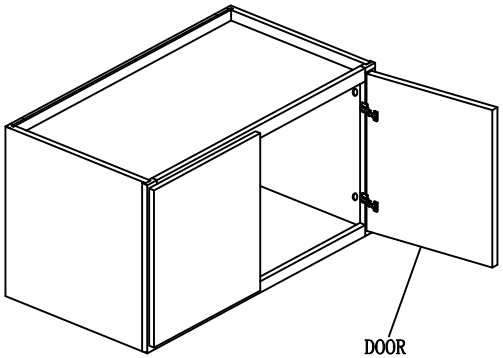

(8)

ASSEMBLY INSTRUCTIONS
WWR3015

	DIAGRAM	CONNECTING FITTINGS	QTY
①		CAM LOCK SYSTEM	12PS
②		CAM LOCK SYSTEM	12PS

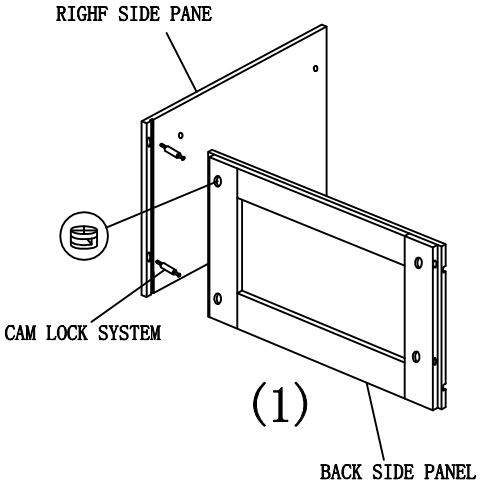

(1)

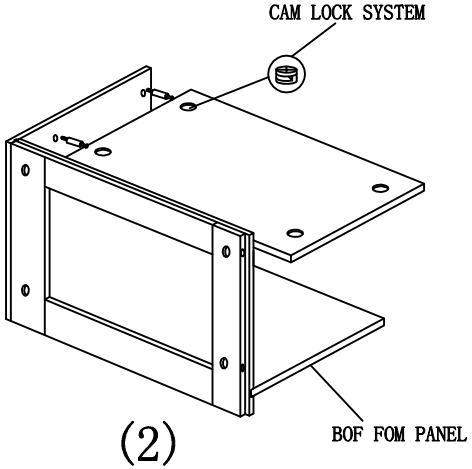

(2)

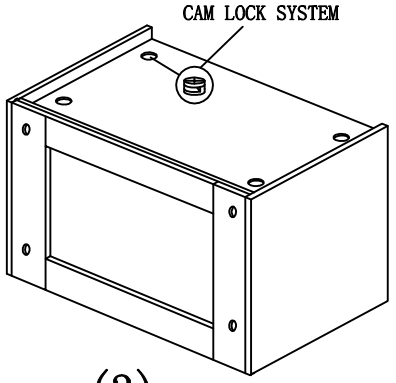

(3)

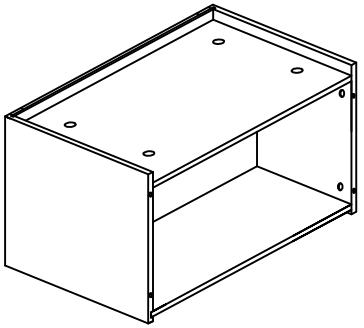

(4)

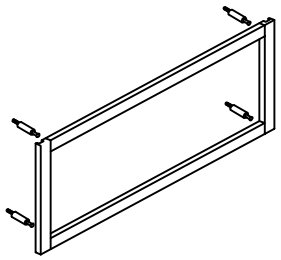

(5)

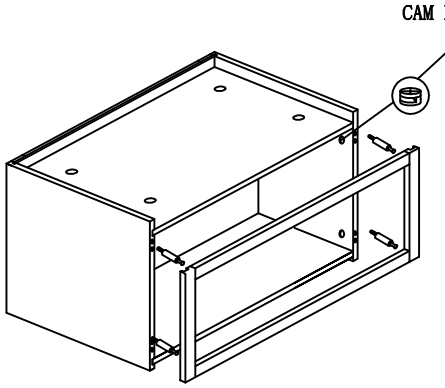

(6)

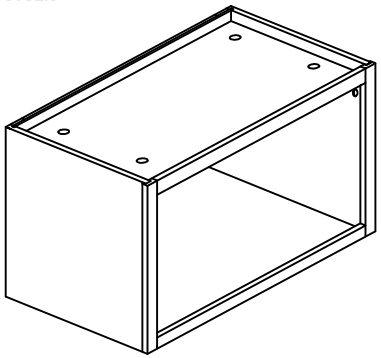

(7)

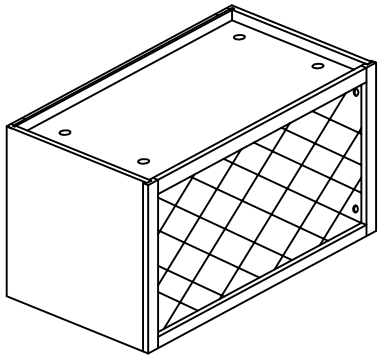

(8)

ASSEMBLY INSTRUCTIONS
WPR3015

	DIAGRAM	CONNECTING FITTINGS	QTY
①		CAM LOCK SYSTEM	12PS
②		CAM LOCK SYSTEM	12PS

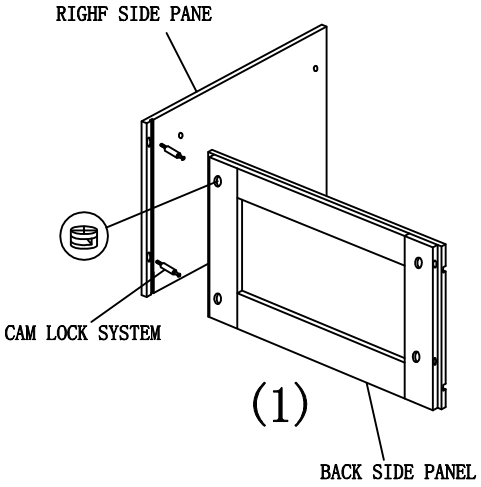

(1)

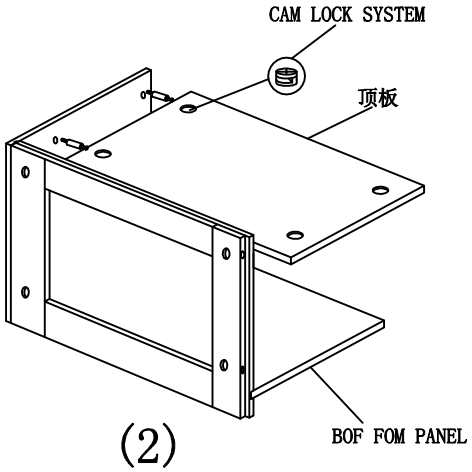

(2)

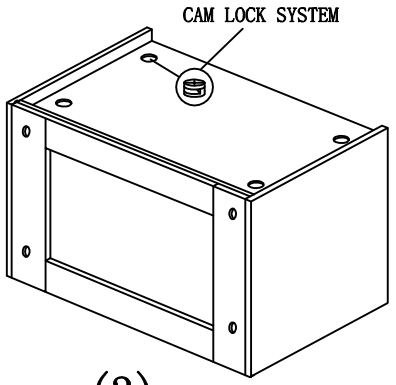

(3)

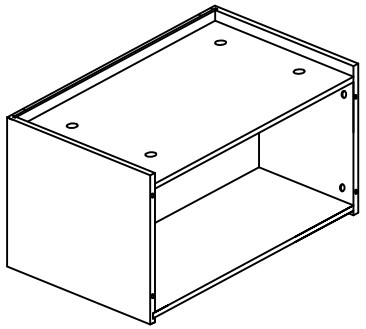

(4)

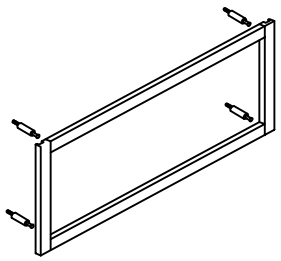

(5)

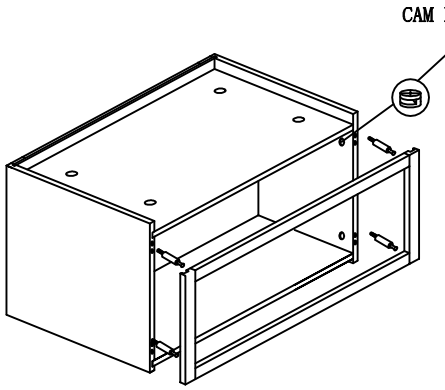

(6)

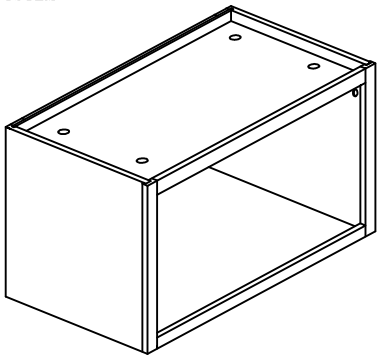

(7)

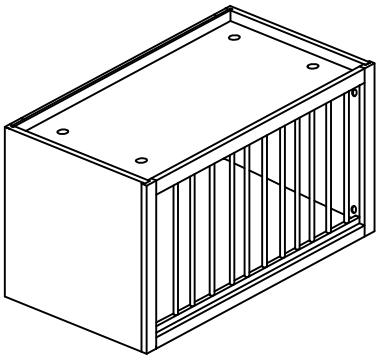

(8)

ASSEMBLY INSTRUCTIONS

WCC1230 WCC1236 WCC1242

DIAGRAM	CONNECTING FITTINGS	QTY
	CAM LOCK SYSTEM	12
	CAM LOCK SYSTEM	12
	DOOR HINGE	2

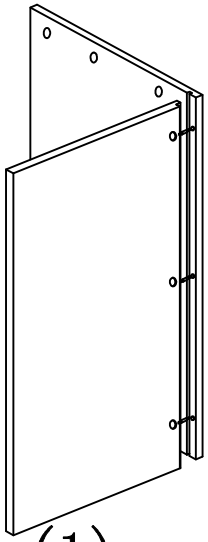

(1)

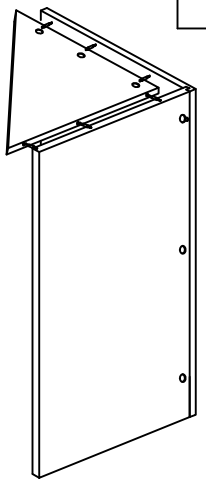

(2)

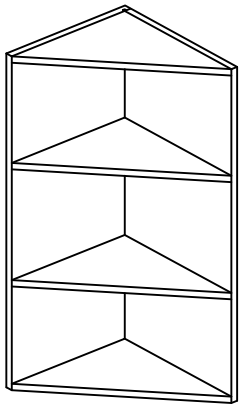

(3)

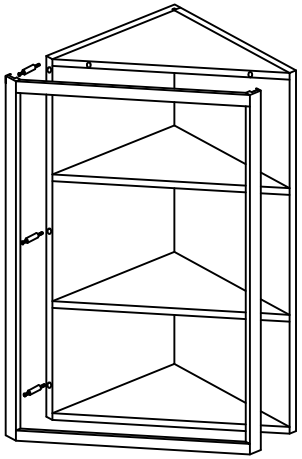

(4)

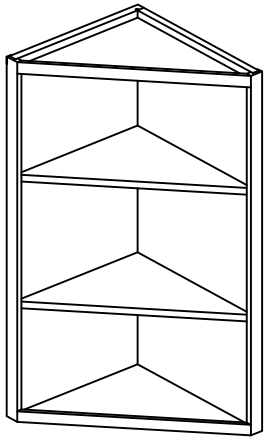

(5)

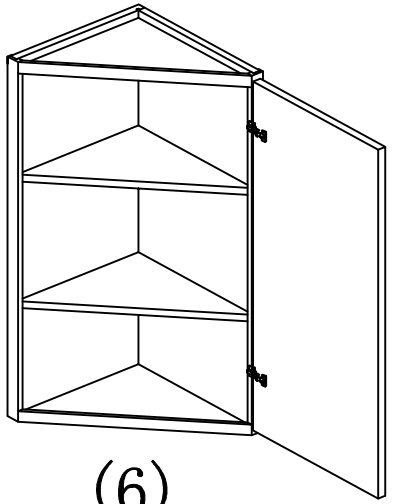

(6)

ASSEMBLY INSTRUCTIONS

WEC(0630-0642)(1230-1242)

DIAGRAM	CONNECTING FITTINGS	QTY
	CAM LOCK SYSTEM	24
	CAM LOCK SYSTEM	24

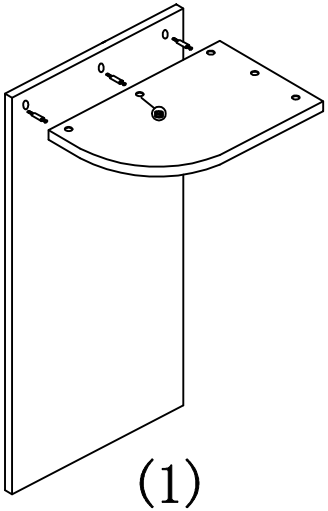

(1)

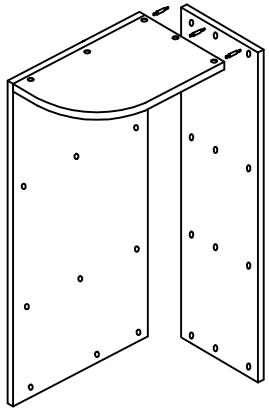

(2)

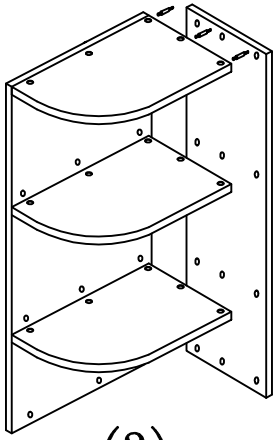

(3)

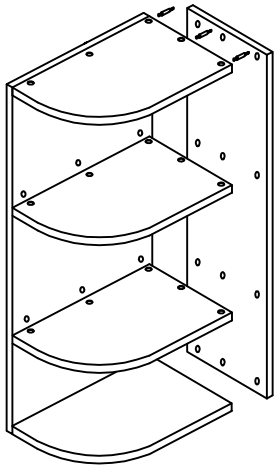

(4)

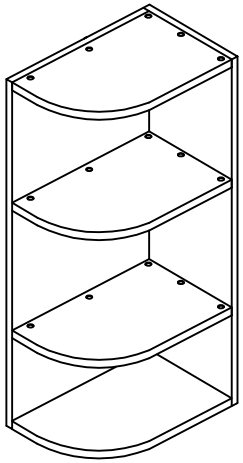

(5)

ASSEMBLY INSTRUCTIONS

WDC(2430)(2439)(2442)

	DIAGRAM	CONNECTING FITTINGS	QTY
①		CAM LOCK SYSTEM	12PS
②		CAM LOCK SYSTEM	12PS

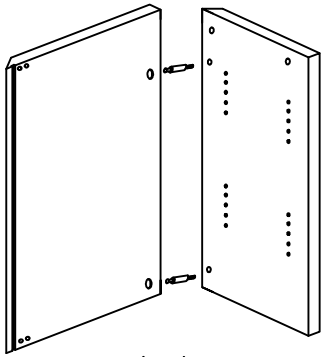

(1)

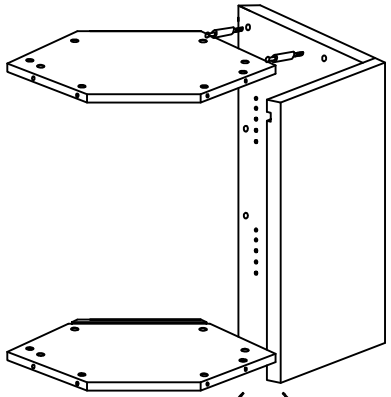

(2)

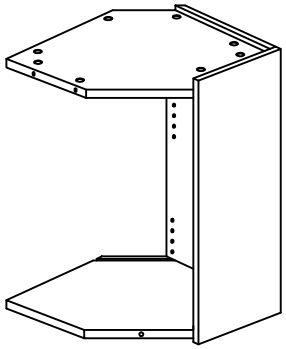

(3)

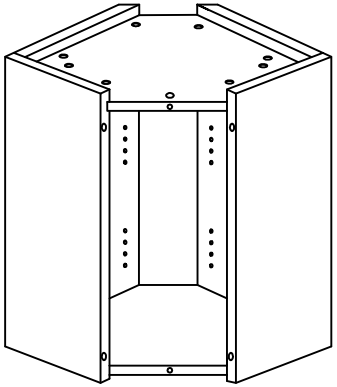

(4)

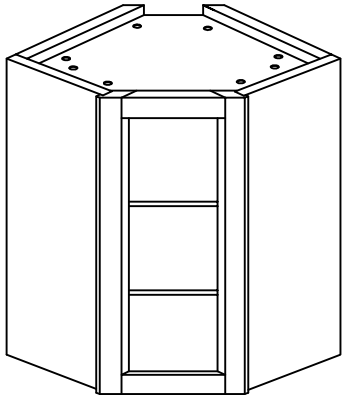

(5)

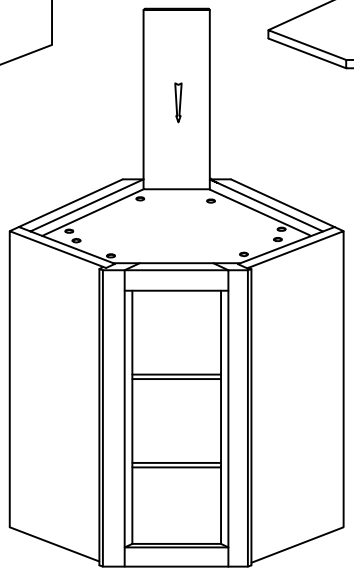

(6)

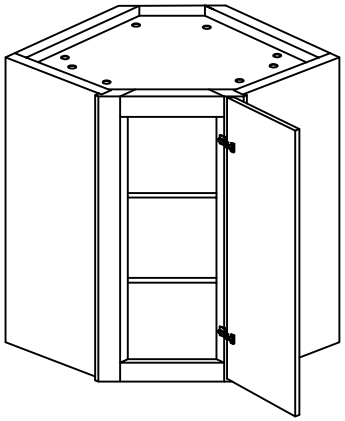

(7)

ASSEMBLY INSTRUCTIONS

WAC2430-WAC2442

	DIAGRAM	CONNECTING FITTINGS	QTY
①		CAM LOCK SYSTEM	12PS
②		CAM LOCK SYSTEM	12PS

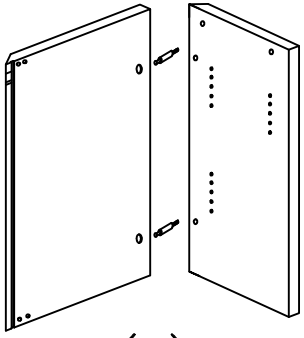

(1)

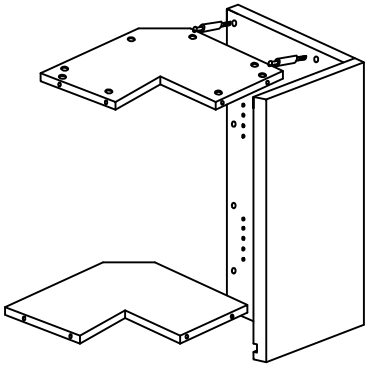

(2)

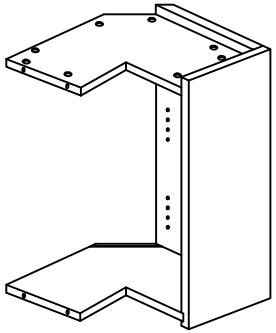

(3)

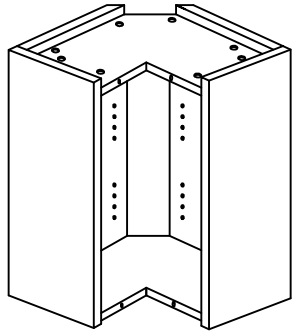

(4)

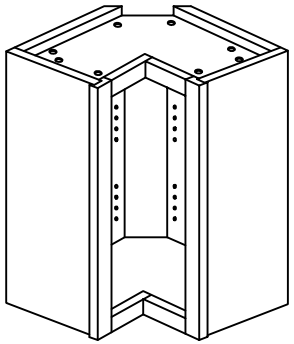

(5)

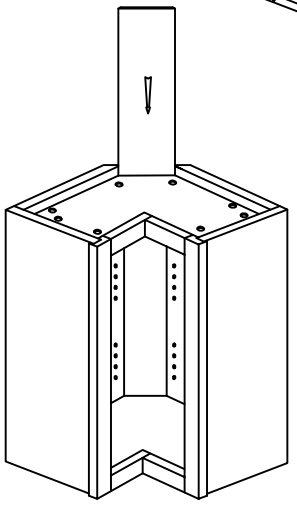

(6)

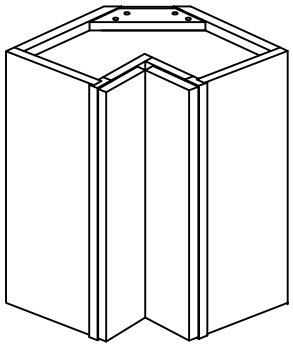

(7)

ASSEMBLY INSTRUCTIONS

PC3093

	DIAGRAM	CONNECTING FITTINGS	QTY
①		CAM LOCK SYSTEM	30ps
②		CAM LOCK SYSTEM	30ps
③		SHELF SUPPORT	20ps
④		SLIDE RAIL	
⑤		CORNER BRACES SCREWS(ϕ3*12mm)	36ps

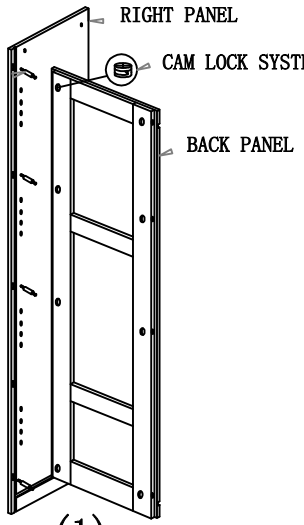

(1)

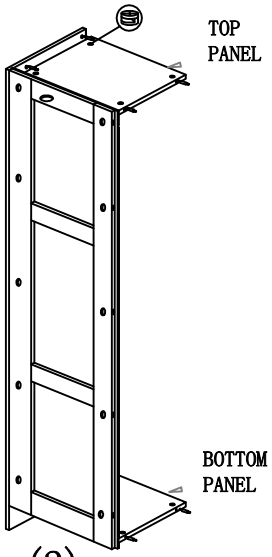

(2)

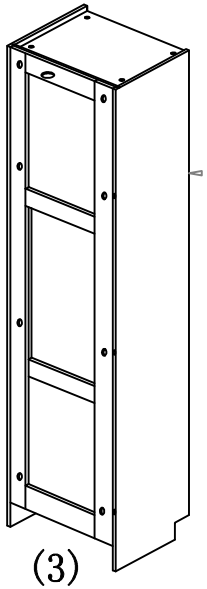

(3)

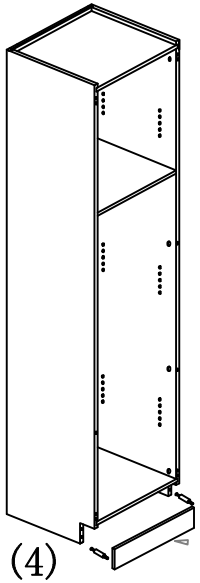

(4)

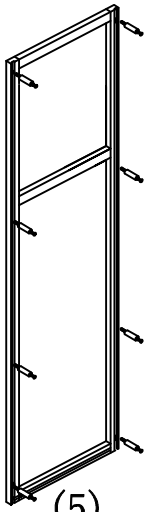

(5)

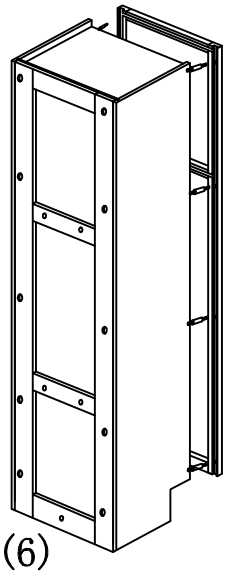

(6)

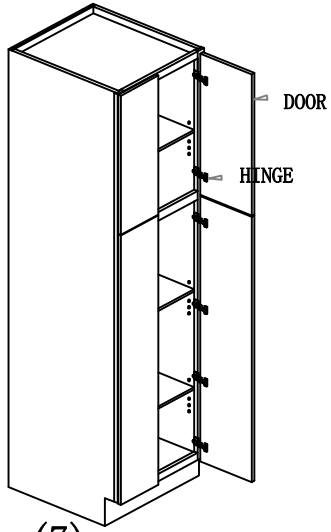

(7)

ASSEMBLY INSTRUCTIONS

PC2484 PC3084 PC3684
PC2490 PC3090 PC3690
PC2496 PC3096 PC3696

	DIAGRAM	CONNECTING FITTINGS	QTY
①		CAM LOCK SYSTEM	34ps
②		CAM LOCK SYSTEM	34ps
③		SHELF SUPPORT	20ps
④		CORNER BRACES SCREWS(ϕ3*12mm)	36ps

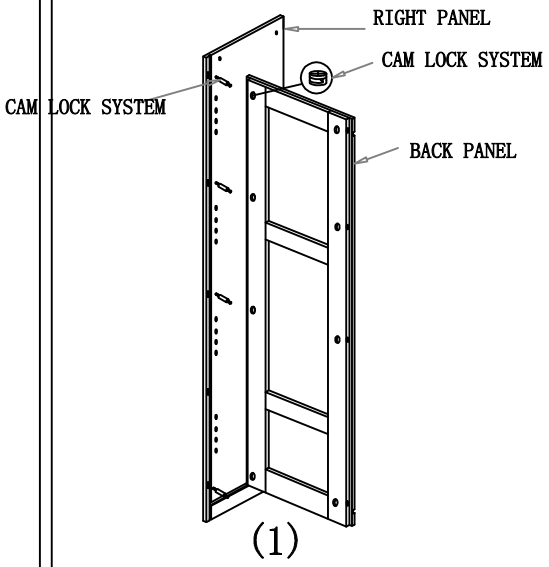

(1)

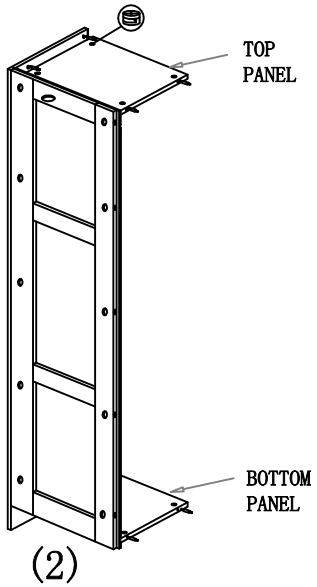

(2)

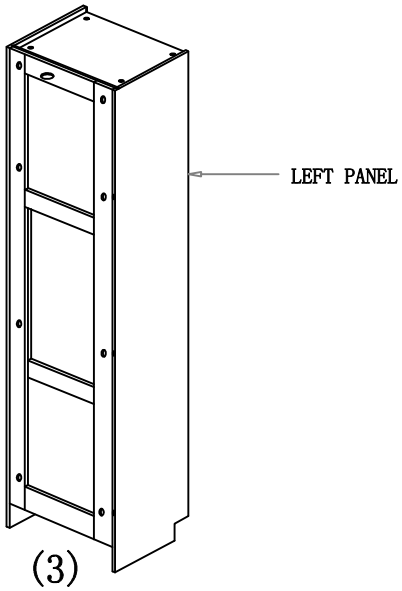

(3)

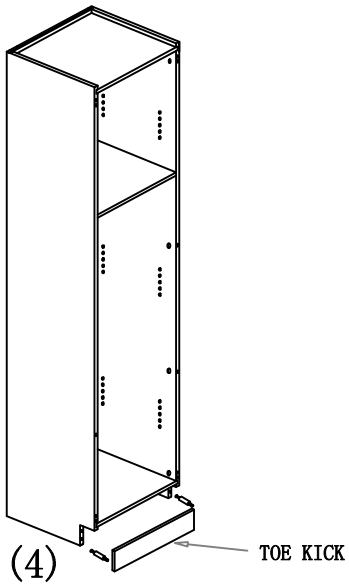

(4)

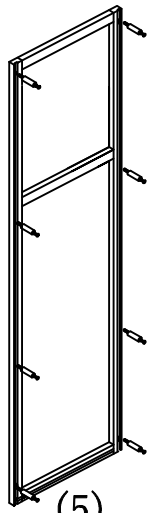
(5)

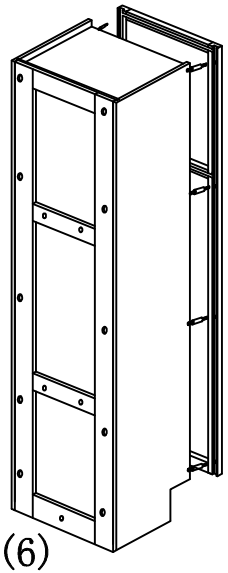
(6)

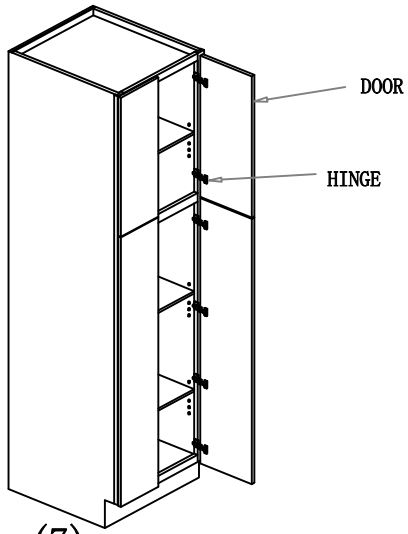

(7)

ASSEMBLY INSTRUCTIONS

PC1584 PC1884 PC1590 PC1890

	DIAGRAM	CONNECTING FITTINGS	QTY
①		CAM LOCK SYSTEM	30ps
②		CAM LOCK SYSTEM	30ps
③		SHELF SUPPORT	20ps
④		CORNER BRACES SCREWS(ϕ3*12mm)	18ps

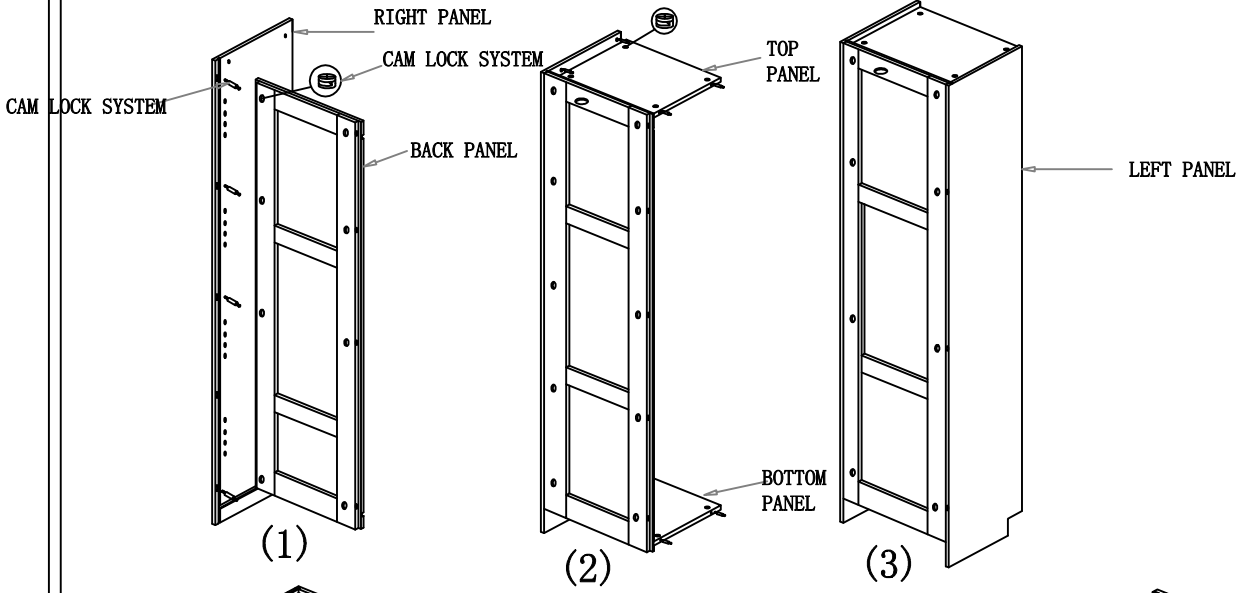

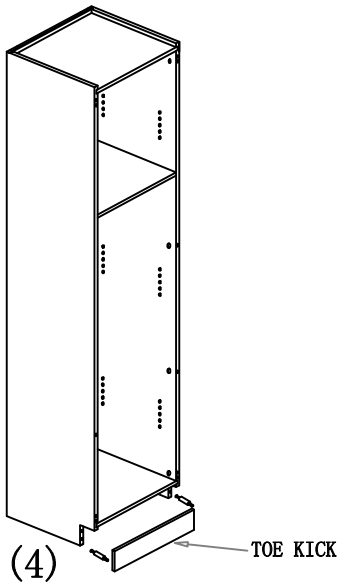

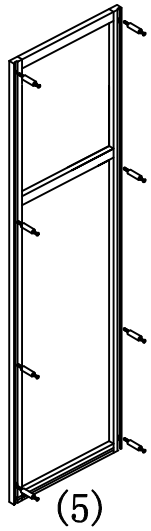

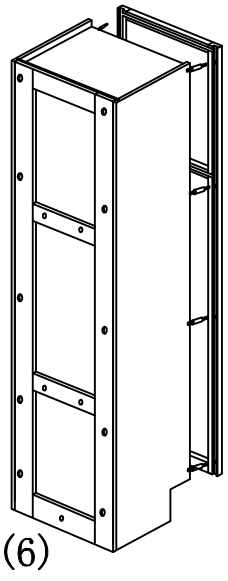

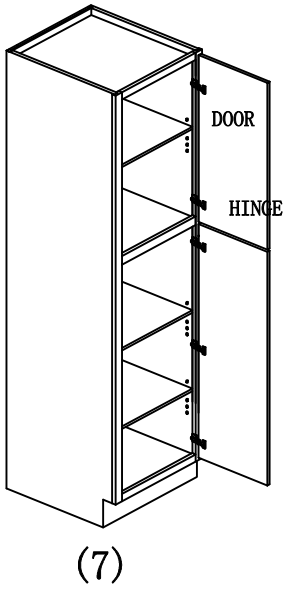

ASSEMBLY INSTRUCTIONS

0CD2884D/0 0CD2890D/0
0CD3184D/0 0CD3190D/0

	DIAGRAM	CONNECTING FITTINGS	QTY
①		CAM LOCK SYSTEM	34PS
②		CAM LOCK SYSTEM	34PS
③		SHELF SUPPORT	
④		SLIDE RAIL	1PS
⑤		CORNER BRACES SCREWS(ϕ3*12mm)	18PS

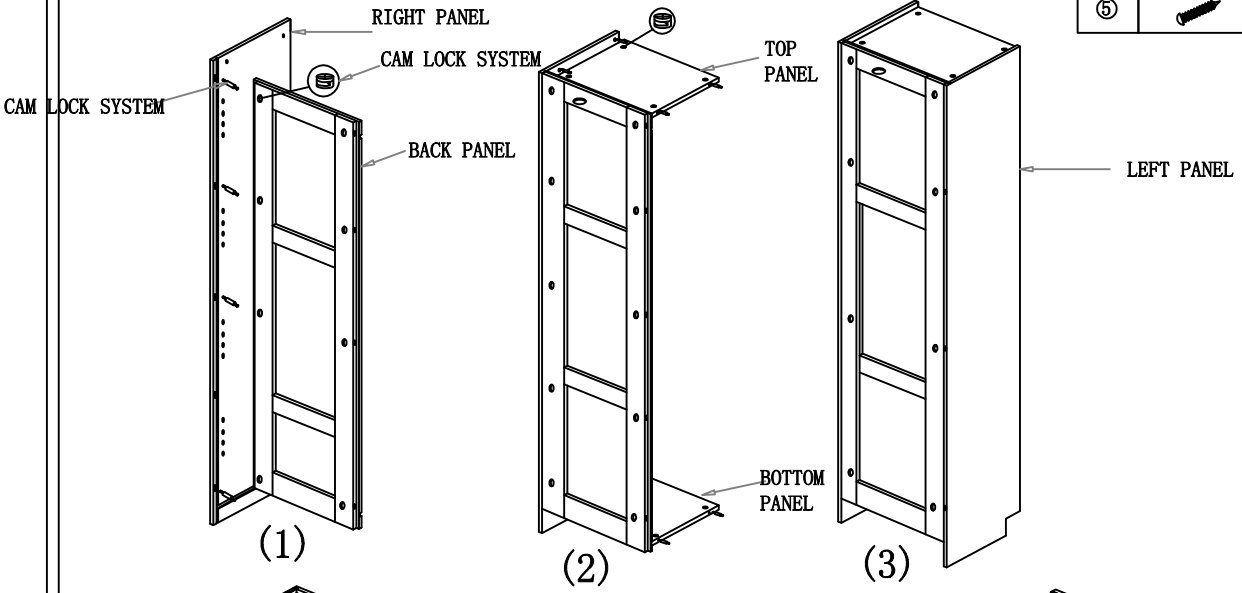

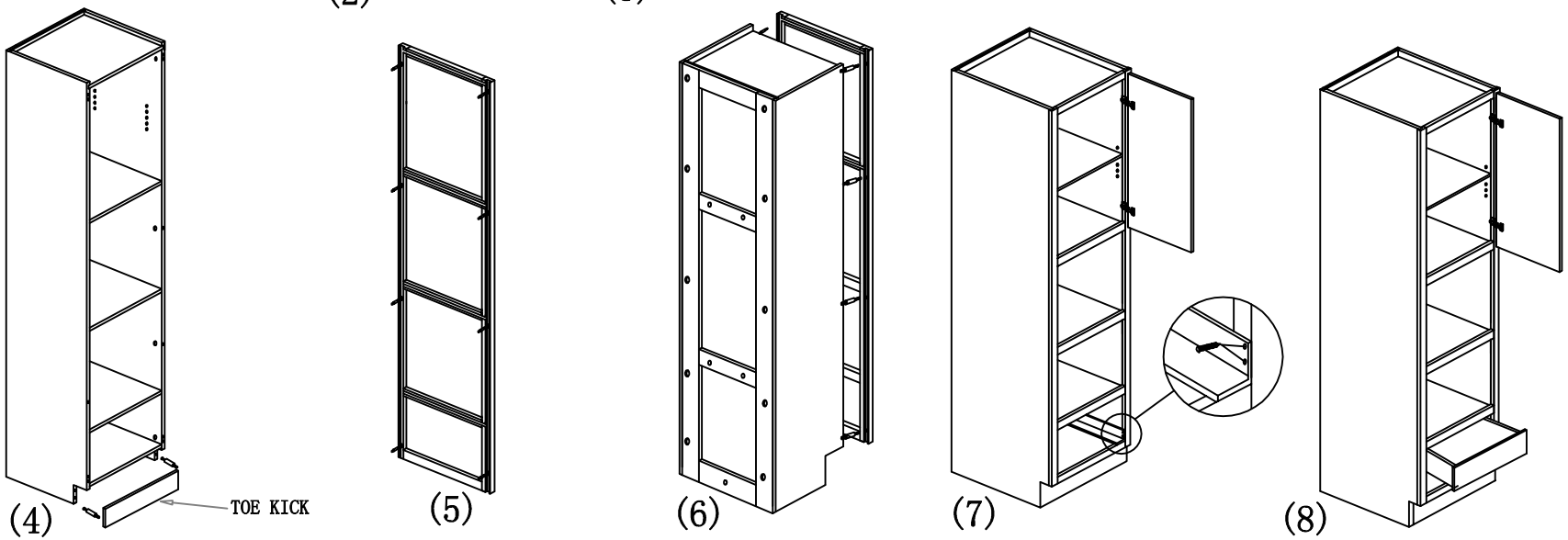

ASSEMBLY INSTRUCTIONS

0CD2896D/0 0CD3196D/0

	DIAGRAM	CONNECTING FITTINGS	QTY
①		CAM LOCK SYSTEM	38PS
②		CAM LOCK SYSTEM	38PS
③		SHELF SUPPORT	
④		SLIDE RAIL	1PS
⑤		CORNER BRACES SCREWS(ϕ3*12mm)	18PS

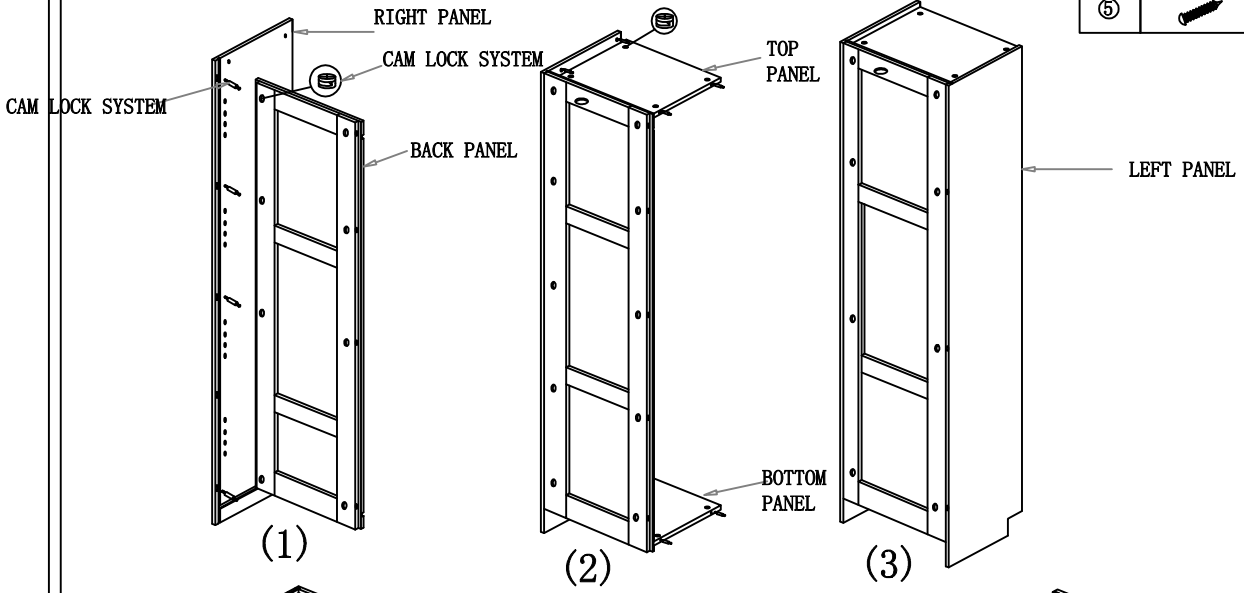

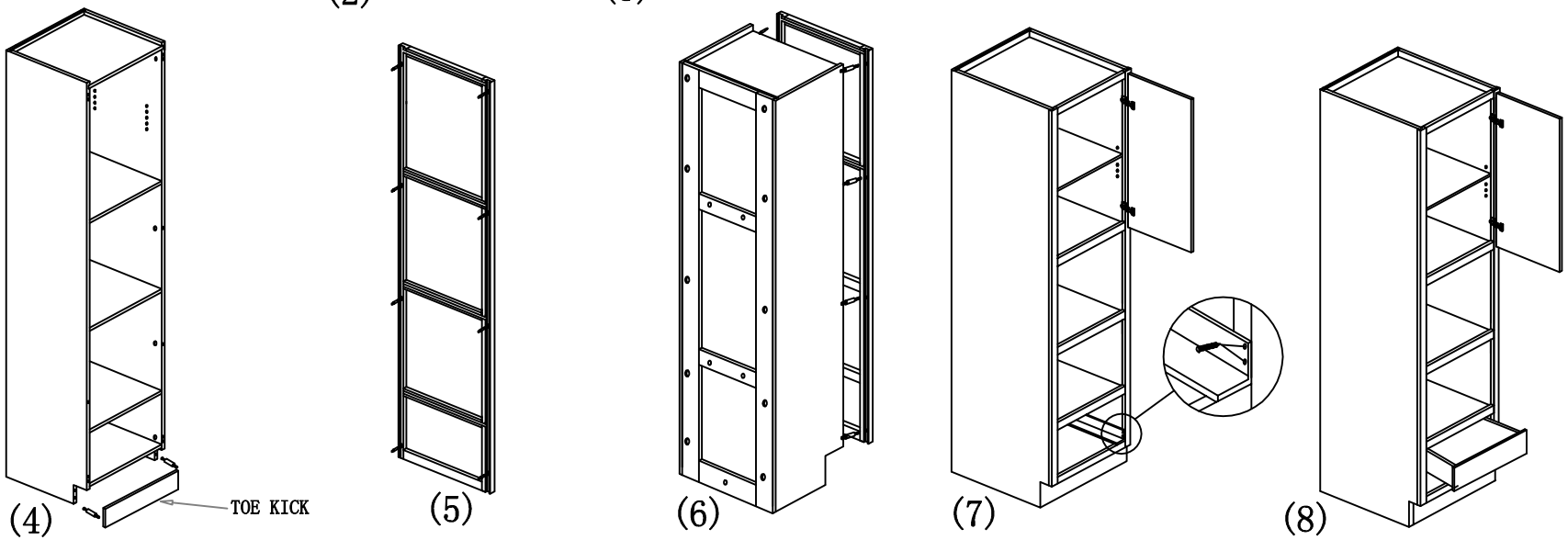

ASSEMBLY INSTRUCTIONS

TPC1284 1293 1584 1593

	DIAGRAM	CONNECTING FITTINGS	QTY
①		CAM LOCK SYSTEM	30PS
②		CAM LOCK SYSTEM	30PS
③		SHELF SUPPORT	20PS
④		CORNER BRACES SCREWS(ϕ3*12mm)	12PS

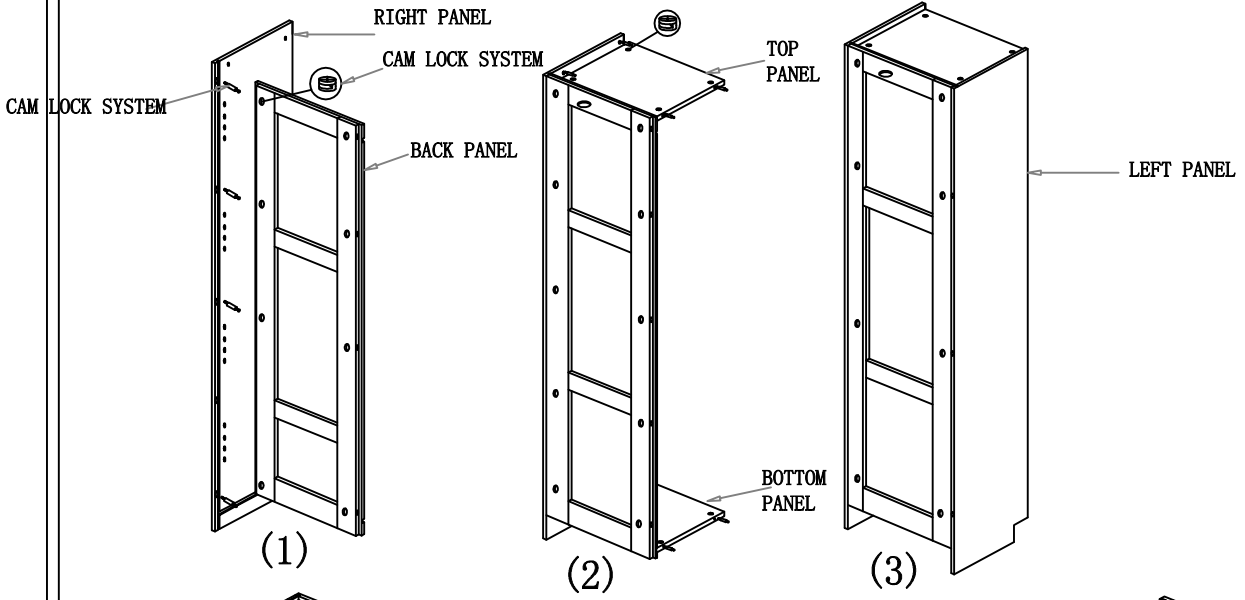

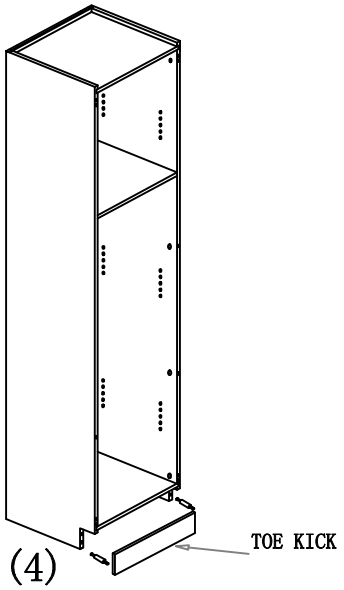

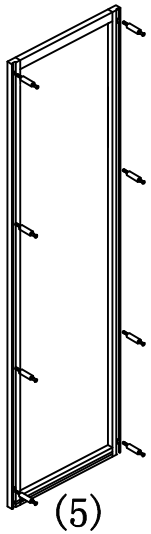

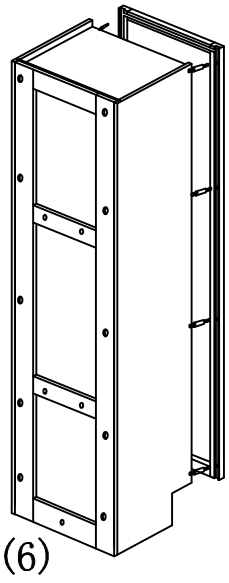

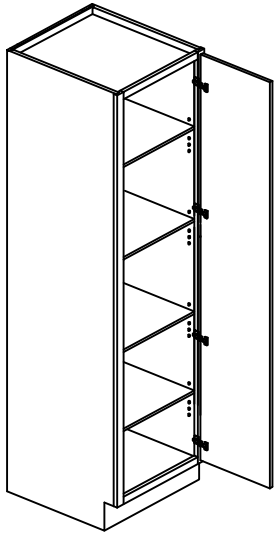

ASSEMBLY INSTRUCTIONS

BPC1284 1293 1584 1593

	DIAGRAM	CONNECTING FITTINGS	QTY
①		CAM LOCK SYSTEM	30PS
②		CAM LOCK SYSTEM	30PS
③		SHELF SUPPORT	20PS
④		SLIDE RAIL	3PS
⑤		CORNER BRACES SCREWS(φ4*16mm)	24PS

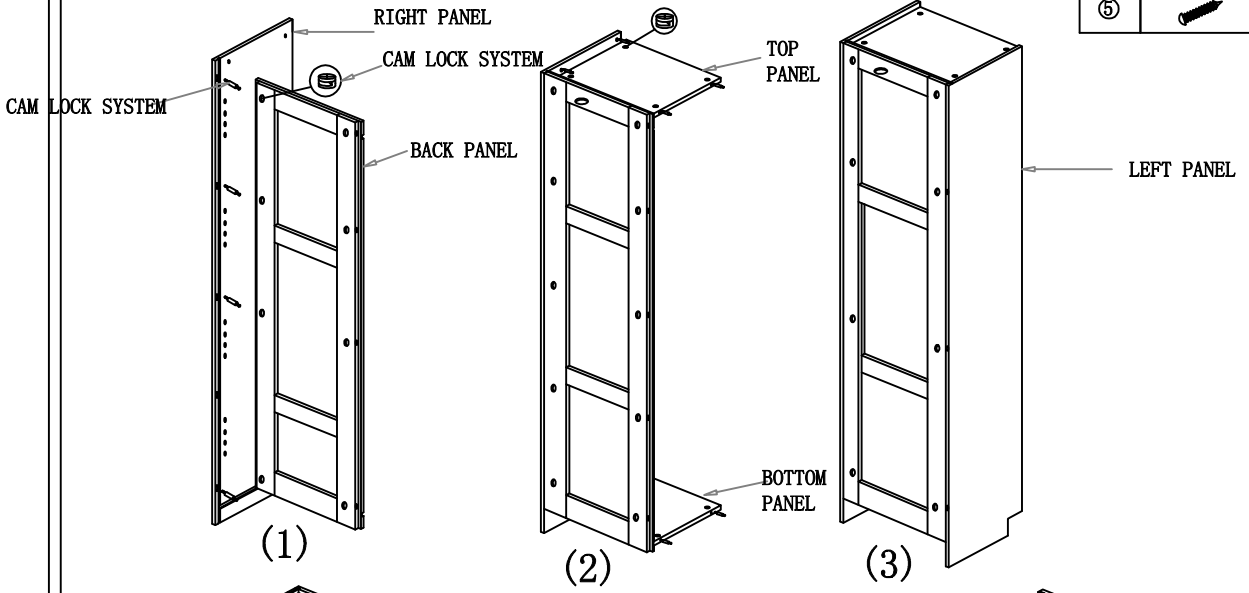

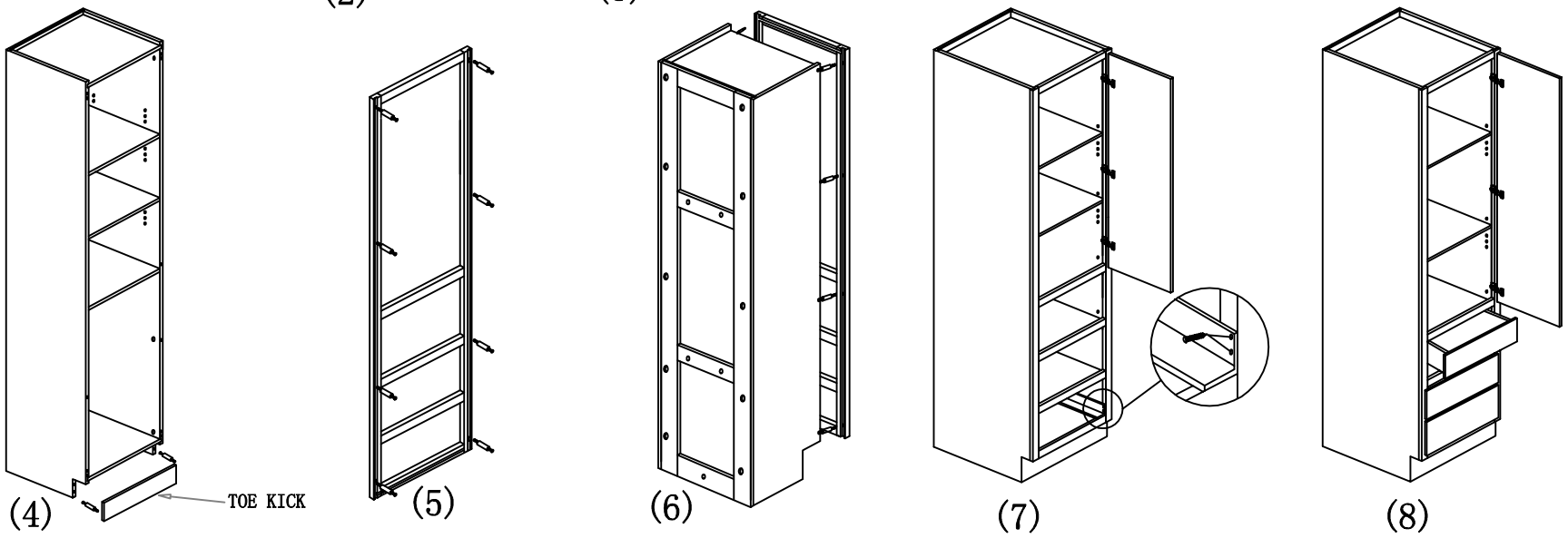

ASSEMBLY INSTRUCTIONS

SPDC3696

	DIAGRAM	CONNECTING FITTINGS	QTY
①		CAM LOCK SYSTEM	34PS
②		CAM LOCK SYSTEM	34PS
③		SHELF SUPPORT	20PS
④		SLIDE RAIL	6PS
⑤		CORNER BRACES SCREWS(ϕ3*12mm)	52PS

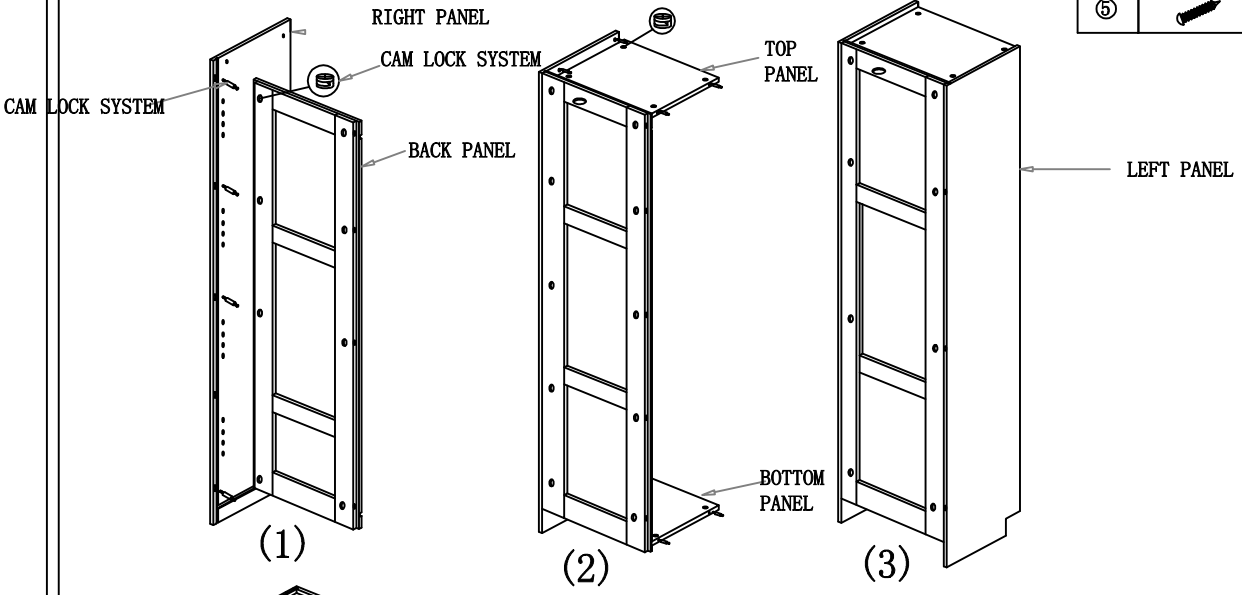

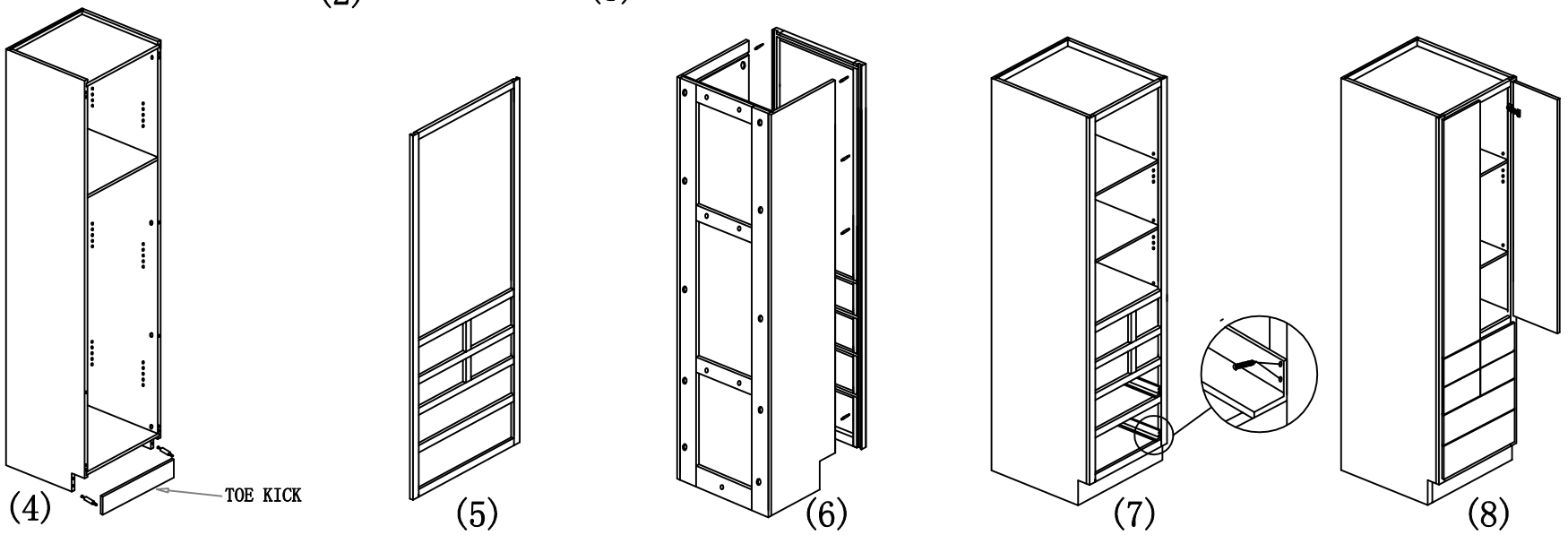

ASSEMBLY INSTRUCTIONS

WGH30

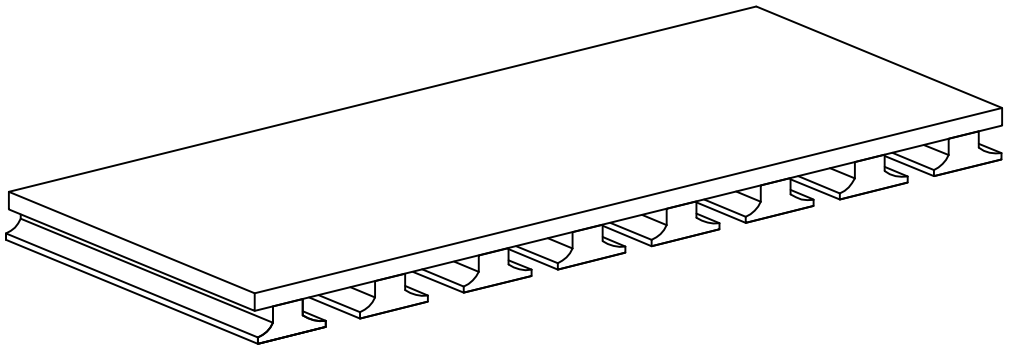

ASSEMBLY INSTRUCTIONS

ROT-B18 ROT-B24 ROT-B36

	DIAGRAM	CONNECTING FITTINGS	QTY
①		SLIDE RAIL	1ps
②			
③			

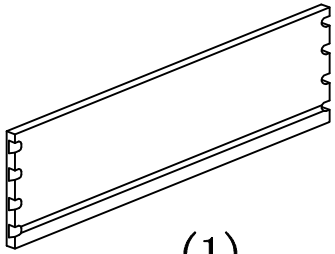

(1)

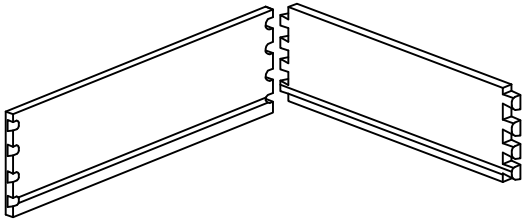

(2)

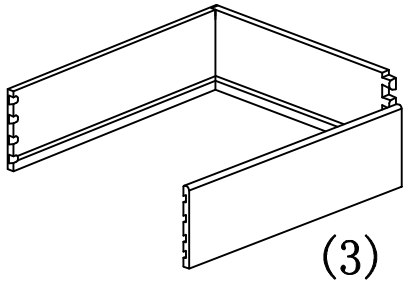

(3)

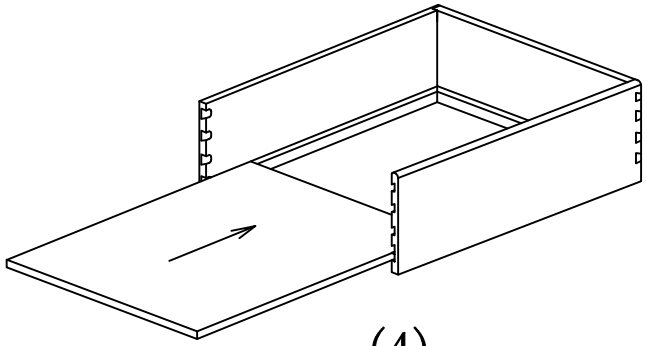

(4)

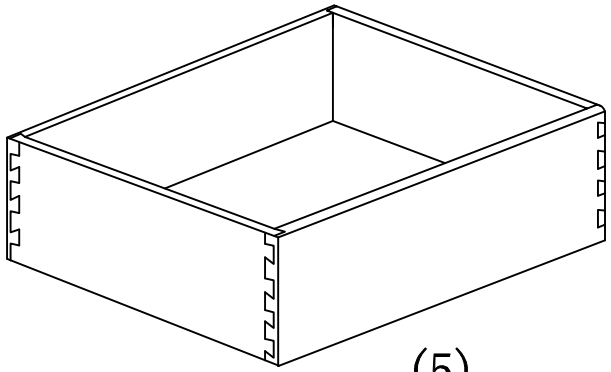

(5)